(12)

1

CLASS B

File No AFD 33 FDP 61.

MYSORE GOVERNMENT SECRETARIAT

Notes / Correspondence / Collection

Department Agriculture Section (Forest-A)

Subject :— Rubber Plantations — by Western India Rubber Company, Bombay — Grant of lands — Representation — Rejected

Earlier References :—

Later References :—

Food 22/11/61 18/11/61

(Classification A / B / C)

Notes pages 26 18/11/61

Correspondence pages 84

For/Not for Section note Book

To be destroyed after

PRESERVED

Under Secretary to Government.

A 1/4/04

ಸರ್ಕಾರದ ಅಧೀನ ಕಾರ್ಯದರ್ಶಿ, ಅರಣ್ಯ, ಪರಿಸರ ಮತ್ತು ಜೀವಿ ಶಾಸ್ತ್ರ ಇಲಾಖೆ (ಅರಣ್ಯ-ಎ)

Subject:- Matchwood Plantation — Supplementing Govt. efforts by M/S W. I. M. Co.

2

Mysore Government Secretariat

[App. F. III 2

File No. AFD 33 of 196 FDP61.

Serial No.

D. No: 3427 — Letter dt. 12.4.61 from M/S W.I.M. Co.

1. M/S W.I.M. Co want to supplement Govt. efforts at matchwood Plantation. In this connection the Company wants to know the facilities the Mysore Govt. would give to encourage matchwood Plantation to be undertaken by the Company.

2. If approved, CCF may be asked for remarks in this regard

3. D.F.A. is submitted:

Initial. 22.4.61.

4. [illegible]

Issued on 27 APR 1961

27/4

P 3/cf.

4. Letter No A2(6)- 2881/61-62 dt. 30-5-61 from the C.C.F.

5. C.C.F has furnished the Remarks in his letter at P 3/cf. and has stated that the question of permitting the Company to raise matchwood plantation to supplement Govt efforts cannot be agreed to as no outside agency

Note.—Contn. Sheet

File No. 33 FDP of 1961..

Mysore Government Secretariat

Serial No.

Can be allowed to take up such afforestation works.

If approved the Company may be informed accordingly as initiated by the C.C.F at paras 1 and 4 of his remarks at P-3.Cf. 6.

Draft letter is put up for approval at P4/Cf. 7

For approval

5.6.61

3/6. 3/6

D.S

For discussion with C.C.F and Secy forests 8

HSR 13/6.

OFFICE OF THE MINISTER FOR FORESTS No. 662 15 JUN 1961

DEPUTY SECRETARY TO GOVT. AGRICULTURE & FOREST DEPTT. NO. 822/G 15 JUN 1961

discussed. ~~The rep~~ If the factory can raise plantations without strings ie without binding the govt. ~~nor~~ raising the royalty according to the market value. it can be permitted. The representative can meet the C.C.F and Secy and discuss the matter

HSR 13/6

16/6/61

H. S. RUDRAPPA
Minister for Forests.

WD 07273—GPB—PZS—8,00,000—1960

15/6.

Serial No.

10. P.A. to M (F): may be requested to intimate the convenient date and time for the representative to meet the C.C.F. and Secy to discuss the matter as per the Minister's order at para 9 supra. Thereafter the party may be informed.

(10) Issue as noted

29.6.61

Issued on 29 JUN 1961

29.6.61

11. D. No: 3367 – X letter dt. 30.4.62 from M/S W.I.M. Co.

12. A perusal from para 1/n.f onwards will recall the case. The Company has already been advised to discuss this issue with the CCF & the Secy. A&F vide Page 6/CF. It appeared, the Co. may be requested to contact the CCF & the Secretary A&F with a view to working out the details of the Scheme.

13 D.F.A. is sealed.

7.5.62

Issue.

9/5/62

Issued on 16 MAY 1962

Note.—Contn. Sheet

P.T.O.

5

Mysore Government Secretariat

RFD File No. 33 FDP of 1961.

Serial No.

The file is resubmitted for indicating the course of action to be pursued as a result of discussions that took place on Saturday the 22nd inst between the D.S. C.C.F and the representative of the Company Sri Harihara Iyer

14.

DEPUTY SECRETARY TO GOVT. NO. 23116 24 SEP 1962 AGRICULTURE & FOREST DEPTT.

Reference is also invited to Para re F. Plantations's indicated in our recent letter to the Various Wood Industries (W.C.P.M. & M.R.P.P etc) wherein we have indicated the course of action proposed in respect of those Companies (Pages 40 of C.F + 50 of C.F) of File No A.7 D48 FDP62 placed below)

JR 24/9/62

D.S.

15.

C.C.F agreed that some suitable area might be released in Chikmagalur Dist. We might write to the CCF and ask for more specific proposals about extent etc.

25/9

WD 07973—QPB—PZS—8.00.000—1000

JR 26/9/62

Mysore Government Secretariat | File No. AFD 33 FDP 61. of 196 | [App. F. III 2

Serial No.

16. Ref. para 15/n.f.

11/C.

DFA is submitted.

~~17.~~

For perusal before issue ~~Draft may be approved.~~

27-9-62.

17) 29/9

30/9/62

D.S.)

(18) Issue

2/10

3/10/62

DEPUTY SECRETARY TO GOVT. NO 23716/F 1 OCT 1962 AGRICULTURE & FOREST DEPTT.

Ace

12-11-62.

Issued on 12.10.62 12/10

13/C

19. D. No: 8085 - CCF's letter No: A2 L(b) 2881/61-62 dt. 19-10-62.

20. A perusal from para 1/n.f onwards will recall the case. The CCF now states that about 5,000 acres of Forest area covered by Range of hills running between Sringeri & Kaikatte & Kalko-Shanze area in Chikmagalur Forest Division may be leased out to M/S NIMCO for raising the proposed plantations.

21. As regards the terms & conditions of the lease the CCF

Note.—Contn. Sheet

PTO

File No. AFD 33 FDP 61 of 196.

Mysore Government Secretariat

Serial No.

states that they will be the same as stipulated in the case of Paper + Rayon Industries. The terms offered to the Paper + Rayon Industries in regard to Plantations are: "a rate of Rs. 80/- per annum per acre or Rs. 5/- per ton of material extracted in the allotted areas until the first crop is harvested."

If approved, the areas indicated in P&D + the above-mentioned terms may be communicated to M/S WIPCO and they be asked to intimate if the Company agrees to the areas + the terms + conditions. 22

D.F.A. is sued. 23

Int.
29-10-62. The draft may be approved. 24

D.S.) 23/10/62

Minr may kindly see the terms + conditions proposed by the CCP 25

Secy (Fy) 27-10 (26) (27) Consult F

Minr Forest

AGRICULTURE & FOREST SECRETARY No. 5197 24 OCT 1962 GOVERNMENT OF MYSORE

DEPUTY SECRETARY TO GOVT. AGRICULTURE & FOREST DEPTT. No. 2466-F 23 OCT 1962

AGRICULTURE & FOREST SECRETARY 29 OCT 1962 GOVERNMENT OF MYSORE

F. 188/62

WD-010154-GPB-PZS-1000,000-1-10-61

Mysore Government Secretariat

File No. AFD 33 FDP 61 of 196

[App. F. III 2

Serial No.

28. Ref - Page 22/n-f.

The terms & conditions indicated in the draft letter at Page 14/CF are the same as offered to other Pulp & Paper Mills and they are the results of the decisions taken in the series of meetings held in the chambers of the C.M. & Min (Forest) in the month of July 1962.

29. The case may be marked to F.D. for opinion. (From Para 14/n-f)

1-11-62

W&S) 6/11

30. F.D. for opinion

F.D) 4/11/62

2/4

6012/W2

7/11/62

8/11/62

U.O.No.6012/W.2.

Finance Department,
Works & Schemes II.

31. The A.&.F.Deptt. is requested to make available the file containing the terms and conditions stipulated in respect of lands leased out to Paper & Rayon Industries - referred to in para 21/n.f.

I/c.Under Secretary,
F.D., W.&.S.

22/11/62

A.&.F.D)

32. File No: AFD 48 FDP 62 es

PTO

Note.—Contn. Sheet

placed below, and may sent to F.D. with ref. to para 31/n.f.

Sri Vanchesware Iyer (F.D)
26.11.62
U.S.(F.D)
26/11

JR
30/11/62

33.

This file has come back from 34. F.D. today, clubbed with file No: AFD 25 FDP 62, without remarks. It may be referred back to F.D. with ref. to para 31/n.f. for remarks.

(F from Para 28/n.f)

16.1.63.
(F.D)
21/1

JR
21/1/63

35.

U.O.No.380/W.2.

Finance Department,
Works & Schemes II.

We had agreed to the levy of a rent of Rs.80/- per acre per annum for areas leased out for raising plantation for 30 years in the case of the Greater Mysore Rayon Grade Pulp & Paper Mills. The same terms may be stipulated in the present case.

36.

Under Secretary,
F.D. W.&S.

16/2/63

MYSORE GOVT. SECRETARIAT 16 FEB 1963 FOREST DEPT.

37. Ref. para 36/n.f.

As per advice of F.D. Govt. have since agreed that forest lands may be given to the Pulp & Paper Industries for raising Plantation only on rental basis i.e @ Rs. 80/- per acre per annum on the lease basis for a period of 30 years. The other alternate condition viz. charging the Company @ "Rs. 5/- per ton of material extracted" has therefore been deleted in the draft letter at PP 14-15/cF. The draft letter may issue, if approved.

Init. 28.3.63.
29/3

(38) Draft may be approved. (Ref to Para 27 of N.7). The draft is as per advice of F.D at Para 36

DEPUTY SECRETARY TO GOVT. NO. 1985 29 MAR 1963 AGRICULTURE & FOREST DEPTT.

~~D.S~~ (34) C.C.J. 29/3/63
JR

Secy.

(40) Please put up a draft to C.C.J.

Minister for Forests

JR
3/4/63

AFD 33 FDP 61

11

41) Ref. Para 40/ante.

D.F.A. is submitted.

Initial.
3.4.63.

42) Draft may be approved. This is to get information from the company through C.F. as to whether they are agreable to the terms & conditions as agreed to by F.D.

D.S)
JDR
4/4/63

(43) Issue
5-4
JDR
5/4/63

DEPUTY SECRETARY TO GOVT. NO. 2014 5 - APR 1963 AGRICULTURE & FOREST DEPTT.

Issued on 10/4/63

10/4
18/E.

44) D. No: 25-63 — Letter dt: 21.2.63 from M/S W.I.M. Co.

45) "CCF for report"
Secd. Min (F&F)
14.3.63.

46) Accordingly, draft letter to CCF is submitted for approval.

AW
17-4-63.

Initial
11.4.63.

(47) Issue
JDR
17/4/63

ISSUED
Date.....196

Serial No.

22/CF.

48. D.No. 4388 - C.C.F.'s letter No. A2(b)388/61-62 dated 25-5-1963.

49. A perusal from para 20 n/f onwards will recall the case.

* pp. 18-20 c/f.

50. The WIMCO has submitted revised proposals for raising softwood plantations on the Forest lands, giving the details of land and the acreage thereof. The Company requires 20,000 acres approximately at different places in S.V.H.E.P area and agrees to pay Rs. 50,000/- per annum for the land. The comments of the C.F. Shimoga on the terms offered by the WIMCO are as follows:-

Terms offered	Remarks of C.F. Shimoga
1. The Co. will require land in SVHEP area: a) all islands and peninsulas to the extent of 10,000 to 15,000 acres. b) other area bounded by the Dam & roads, surrounding the sub-mersion area, to the extent of 5000 acres.	1. The proposal of lease of the narrow belt around the Reservoir can be considered. The total area of the belt will be approximately 20,000 acres. For the purposes of arriving at the exact area, survey of the belt included in State Forest as well as Revenue lands to be given to Forest Department will have to be done.
2. Sringeri/Gangamulla area. Portions of the valley and lower slopes which contain good soil and which are suitable for matchwood plantations.	2. It is possible to obtain another 2000 acres of land in this area, for lease to WIMCO. A couple of islands in the Linganmakki Reservoir may have to be reserved in SVHEP submersion area for developing into Bird Sanctuaries.
3. The lease period may be for 99 years. The amount of lease rent may be revised every 30 years. Any increase of lease rent may not exceed 50% of the original lease rent.	3. The proposal may be accepted as it is fair enough. The Company will not have any right over the existing forest growth on the areas.

Note.—Contn. Sheet

Serial No.

4. For the 20,000 acres an annual lease rent of Rs. 50,000/-for the first period (30 years) would be a fair amount.	4. Considering the unfertile and unproductive land to be leased to the Co., the amount of Rs. 50,000 appears fair. It works up to Rs. 2-50 per acre per annum.
5. Payment of lease rent may be based on the area brought under plantation or occupation of the Co.	5. Lease rent should be payable for the entire area based out from the date of lease so that the earmarking of the area can be ensured. The C.F. however, leaves it to Government to decidethe rent to be levied.
6. The Co.suggests that the lease should provide the following points:-	
a) use of the area for the plantation of matchwood as well as any other tree species as the Company deems suitable.	May be agreed to, provided the Co.grows timber and forest produce and not the agricultural produce of any kind.
b) use of any part of the land for the erection of any industry without any extra charges.	May be agreed to as long as the industry is connected with the use of the crop produced on the leased area.
c) unrestricted use of dam-water free of charge for the irrigation of the plantations as well as of any industry which may be established in connection with these plants.	c) i. This may be decided in consultation with Ele. Department. ii) There may not be any objection to the use of water free of charge for irrigation of nurseries. iii) Even for irrigated plantations, a nominal water rate may be fixed. iv) The use of water for the industry, if any established, may be on payment of nominal water rate.
d) the right of way for bringing any product or materil to and from the leased area across Government Forests or Revenue land.	May be agreed to.

WD-010154-GPB-PZS-8,00,000-1-10-61

Serial No.		
	e) for the lease period of 99 years the land under lease should not be brought within the purview of any legal enactment restricting the area that may be owned by an individual or Company.	May be agreed to provided the Company maintains and protects the status quo of the catchment area by adopting such measures of soil conservation as necessary while practising operations.
	f) in the event of the Company closing its factories, the Co. should have the right to terminate the lease by 12 months' notice, which may be given at any time.	May be agreed to.

51. This scheme of M/s. WIMCO envisages supplementing Government's efforts at raising plantations. It will serve double purpose viz: (i) covering barren lands with forests and (ii) giving matchwoods to the Company. Due to large scale disforestment of lands during recent years for agriculture and other purposes, the percentage of forests in the State has considerably decreased. If WIMCO has come up with this bold enterprise to raise plantations at its own cost, it deserves encouragement at the hands of Government. The scheme involves huge expenditure on the maintenance of Plant nurseries and transplanting the trees in suitable areas and then on watering and guarding of the plantations. Softwood trees will normally require 30 years to mature. So, for the initial period of say 30 years the Company will not be able to derive any benefits from these plantations. The proposed lease rent on 20,000 acres at the rate of Rs. 50,000/- per year, for a period of 30 years will amount to Rs. 15,00,000. The expenditure that will be incurred by the Company in raising plantations will be much more than the lease rent for the

Serial No.

land. In short, the Company will have to spend lakhs of rupees before harvesting the first crop of matchwoods from the lands leased out to them. Considering the aspects of the scheme, Government may agree to lease out forest lists to WIMCO at a suitable lease rent. The terms and conditions of this scheme may be discussed in a meeting consisting of officers from P.W.D., C.& I.Dept., F.D., A. & F.D. and the C.C.F.

Submitted for orders.

A

CW

11.6.63 2416. The request of the WIMCO is for release of certain areas (Sharavathy valley & surroundings) for raising Plantations of Matchwoods and they have offered certain terms & Conditions. The remarks of C.F. Shimoga & of C.C.F 22 & 26 of C.F. The Terms offered by the Company and the remarks of C.F. Shimoga on each item is indicated in juxtaposition in Para 50 of N.F. As indicated in Para 51 of N.F. this subject has far reaching effects and involve heavy financial expenditure on the part of the Company and it is perhaps desirable to come to decision only after convening a meeting

52

Pl. discuss.

20/6/63

spoken to

22/6/63

Mysore Government Secretariat

File No. 33 FD 66 of 196

[App. F. III-2 16

Serial No.

as indicated at 'A' in Para 51 of N.F.. So before convening a meeting it would be useful to obtain the remarks of C+I & F.D.

~~D.S.~~ (53) 22/6/63

25-6.

(54) ~~Secy.~~ For Kind Remarks of C&D and F.D.

Y. C. HOMBALAYYA,
Secretary to Government,
Agriculture & Forest Department.

C & D

(55) The point or points on which remarks of the C+I Dept. are required may please be clarified.

C+I Dept. will attend the meeting when convened.

A. ALIKHAN, 5/6/63
Dy. Secy., Com. & Ind. Dept.

~~F. D.~~

A. & F. D.

(56) Submitted.

The remarks of C.&I. Deptt. were generally sought for from the point of view of "encouragement to the Industries." For orders whether the file may be sent back to C.&I. Deptt. for their recommendations, if any.

C+I Dept.

PTO.

Shri S.T.S.

C.W. Speak 16/8/63

Note. Govtn. Sheet

AFD File No. 33 FDP of 1961.

Mysore Government Secretariat

Serial No.

A&F Dept.- Forest Section

57. The various points on which decisions have to be taken are indicated in paras 50-51 of n/f. Even though there are no specific points on which the C&I Dept.'s remarks are required, this file had been sent to them because the Scheme ~~it~~ indirectly will be helpful in getting necessary species and wood required for matchwood industry and lops and tops for pulp and paper industries and also for fuel and charcoal industries. Since this being a venuture on the part of M/s. WIMCO on a very large scale which no other Company has come so far to undertake, the file is sent for favour of the opinion of the C&I Dept. to indicate whether it is advantageous to Government to ~~undertake taking~~ entrust such a large scale work connected with the raising of plantations to this Company.

22/8/63
(T.S.Ramaiya)
Under Secy., A&FD.

C.&I Dept
24/8

MYSORE GOVT. SECRETARIAT 7038 22 AUG 1963 INDUSTRIES DEPT. BANGALORE

58. It is understood that this file is required back by A&F.D. immediately. Hence returned.

26/8/63

A.&F.D.

MYSORE GOVT SECRETARIAT 5311 24 AUG

WD-010154-GPB-PZS-8,00,000-1-10-61

Mysore Government Secretariat | File No. AFD 33 FDP 61 of 196 | [App. F. III 2

Serial No.

Ref. Paras 57-58/n.f. supra.

59. The Executive Director of M/S W.I.M. Co. called on the Secy. A&F.D. on 26.8.63 at 2 P.M. The Exec. Dr. was asked to await the final decision of Govt. in this behalf.

60. The case may be referred to C&I Dept. v.s.l. Para 57/n.f.

26.8.63. C&I Dept. 29/8/63

29/8 30/8

Shri S.M.J.

Com. & Ind. Dept. (Seri).

61. Although Mysore has a rich forest area forest based industries have not made any ~~move~~ mark here. The Techno Economic Survey Consultant has suggested industries like paper, rayon, chip board, match splints and joinery etc. If these industries are started in the State, the forest resources will be entirely required by them.

62. WIM Co. is not a concern of the State. If such a vast area of land in a place where water is plentiful is given away for raw materials for an industry located elsewhere, the scope for the industries in the State will become restricted. Therefore the C&I Dept. is disinclined to recommend the grant of land. It is suggested that the A&F Dept. may therefore take up the afforestation instead.

28/10. AFD 22/10/63

23/X

PTO.

Note.—Contn. Sheet

Serial No.

Ref. C&I Dept's remarks at paras 61-62/n.f.

The case has been explained at length at paras 50 to 52/n.f. //The Plantation Scheme of M/S WIMCo envisages supplementing Government's efforts at raising plantations. Different species of softwoods and matchwoods are in great demand by the Industries. The C.C.F. has undertaken afforestations on a large scale. Even when these plantations are mature and fit for exploitation, they will not be in a position to cater to the increasing needs of the Industries. The problem of utmost importance is that of funds. In these days of financial stringency so many schemes - Plan as well as non-plan - are faced with the difficult situation of non-availability of funds. F.D. has expressed inability to provide funds for forest schemes - file No.AFD 61 FFI 63 and No.AFD 68 FFI 63 refer.

63.

The scheme of M/S WIMCo, if given a trial, will produce matchwoods in sufficient quantity ~~and~~ in Sharavathy area, and consequently the other forest areas of the State will be ~~able~~ free to cater to the needs of the local match Industries. Apart from producing matchwoods, the scheme will go a long way in giving firewood for fuel and charcoal in the shape of lops and tops.

64.

The case may be discussed in a meeting consisting of officers from PWD, C&I Dept, F.D. and A & F.D. and the C.C.F.

65.

28.X.63.

29.10.63 Before taking further action, it is necessary to send the file to the remarks of F.D. (Para 54 of N.7)

66.

F.D. for favour of remarks. (Para 50 of N.7)

31/10/63.

MYSORE GOVT. SECRETARIAT
No.
4 NOV 1963
FINANCE DEPTT.

5023/62

Mysore Government Secretariat

File No. 33 PDPG/ of 196 .

[App. F. III 2

Serial No.

F (71)

U.O.No.6023/W.2.

Finance Department,
Works & Schemes II.

67. Finance Department has no remarks in the absence of specific proposals.

S. Abdul Wajid
Under Secretary,
F.D., W.&.S.
21/11

A&FD)

MYSORE GOVT. SECRETARIAT (AGRL. & FOREST DEPT. (TAPPAL SECTION)
No. 7986
21 NOV 1963

68. Ref. para supra.

The proposal has been explained at length at Paras 50 & 51/n.f. and agreed at Para 57/n.f. The case may now be submitted to Min(F&F) for finance of pecuniary & others.

23.11.63.

26/11

21/11/63

69. Paras 50 N7. onwards may be perused. As indicated at Para 65, if agreed to the proposal may be discussed at a meeting ~~with~~ consisting of the officers of C.&I., A.F.D., F.D., P.W.D. & C.F. when the Representatives of the Company may also be invited to attend.

DEPUTY SECRETARY TO GOVT. AGRICULTURE & FOREST DEPTT.
NO. 80.38
26 NOV 1963

D.S. (70) 26.11 26/11/63.

(71) Para 69 for kind appl.

(72) Para 69 is approved 28.11 30.11.63

Sec'y A.

AGRICULTURE & FOREST SECRETARIAT GOVERNMENT OF MYSORE
No. 6196
26 NOV 1963

OFFICE OF THE MINISTER FOR FORESTS & FISHERIES BANGALORE.
No. F. 2963/62
Note.—Contn. Sheet
28 NOV 1963

Minister for Forests

(C-A&F) 30/11

File No. AFD 33 FDP 61 of 196.

Mysore Government Secretariat

Serial No.

Ref. Para 72/n.4. Supra

The case may be marked to P.S to Min (F&F) with a request to give the date & time of the holding a meeting on the subject. 73.

3.12.63 It is desirable to fix up the meeting in the month of January 64 on any date convenient to the Hon'ble Minister, since dates for a number of other meetings have already been fixed during the second week of this month and the Minister may be busy in addition to L.A & L.C Sessions, with meetings of S.W.B.L. at Mysore & also with Forestry Meetings on 28th & 29th of this month. 74.

P. S to the Minister for Forests

JR 4/12/63

This may be fixed on 3-1-64 75.

JR 6.12.63

U/S. (Forests)

Please put up draft. 76.

JR 6/12/63

Ascertained from P.S to Minister and he intimated 4 P.M. may be fixed for the meeting.

OFFICE OF THE MINISTER FOR FORESTS No. F 3041/63 5 DEC 1963 BANGALORE.

Subject:- Plantations Scheme of M/S W. I. M. Co.

22

Mysore Government Secretariat

File No. AFD 33 FDP 61 of 196

[App. F. III 2

Serial No.

77. Ref. Para 76/N.F. 81-86/C.F.
Two Draft letters are submd. for approval.
17.12.63.

78 Shri Harihara Iyer, Wood$ Director, WIMCO ~~had~~ sent a trunk call stating that he would be scheduled to go to Nepal during the first week of January 1964 and that the meeting in connection with the matchwood plantation may kindly be fixed on any day subsequent to 15th January 1964. In para ~~75~~ 77, Minister for Forests has been pleased to fix the date as 3-1-64. Draft~~s~~ notices are also put up accordingly. It is therefore for consideration whether the file may again be submitted to the Minister for Forests as to the request mady by the Wood~~s~~ Director, VIMCO for ~~a~~ change of ~~a~~ date.

13/12

D.S., A & F.D.

Submitted for kind orders of the Minister (F.).

V. M. LINGIAH,
Deputy Secretary,
Agriculture and Forest Department.

M. (F.F.).

79.

The meeting may be fixed on 15th January 1964 at 2 p.M.

17.12.63

B. RACHAIAH,
Minister for Forests,
Food and Civil Supplies.

S. A. (F).

80.

DEPUTY SECRETARY TO GOVT. AGRICULTURE & FOREST DEPTT. NO. 8647 13 DEC 1963

OFFICE OF THE MINISTER FOR FORESTS & FISHERIES BANGALORE. No. F. 3088/63 16 DEC 1963

AGRICULTURE & FOREST SECT. 6779 17 DEC 1963 GOVERNMENT OF MYSORE

23

File No. AFD 33 FDP 61 of 196 .

Mysore Government Secretariat

	Serial No.	
Ref: para 80/n.f.	81.	
Draft letters & note at PP 31-36/CF may issue, if approved. Int. 19.12.63. 2 20/n		
Issue & put up 24/12/63	82.	C.W. M bring up 22/12/63 to Spokesman 31/12/63
ISSUED Date 7/1/1964		
Ref. para Supra. The file is resubmitted. Int. 7.1.63. 2 9/1	83.	
The meeting is scheduled to take place at 2.P.M. on 17-1-1964. in the Minister's Chambers. The file may kindly be placed for the perusal of the Minister for Forests at the appropriate time. 14/1/64	84	
P.S. to Minister for Forests		

OFFICE OF THE MINISTER FOR FORESTS & F... No. F. 48/64 14 JAN 1964 BANGALORE

Matchwood plantation - supplementary efforts by M/s Wimco.

Mysore Government Secretariat

AFD File No. 33 FDP of 1961. [App. F. III 2

Serial No.

A&F Dept.- Forest 'A' Section

-oOo-

85. The meeting was held in the chambers of the Minister for Forests & Fisheries when the under-mentioned officers and the representatives of M/s. Wimco were present:-

The Minister for Forests,
The Secy. to Govt., A&FD,
The Chief Conservator of Forests,
The Under Secy. to Govt., C&I Dept. (Sri K.Seshadri Iyengar),
The Under Secy. to Govt., A&F Dept., (Sri T.K.Rangaraja Iyengar)
The Under Secy. to Govt., A&F Dept. (Forests)
The Representatives of M/s. Wimco:-

(i) Sri T.A.Harihara Iyer,
(ii) Mr. Jan-Olof Guthe.

The draft of the proceedings of the meeting is put up for kind approval. It was decided at the meeting that a policy decision had to be taken. We may first of all obtain the information from the C.C.F. as to whether it would be possible for the department itself to undertake such a scheme keeping in view the extent of availability of raw material, the number of industries that are now functioning, the number of industries that are likely to be set up taking into consideration the pending applications etc. The C.C.F. has promised to furnish his report very early for taking further action in this behalf.

23/1/64
(T.S.Ramaiya)
Under Secy., A&FD.

(87)

DY.SECY.(A&FD)

V. M. [illegible]
Deputy Secretary,
Agriculture and Forest Department

SECY.(A&FD)(88) The Report of the C.C.F may be awaited and further action taken thereafter. Put up.
31.1.64

MINISTER FOR FORESTS (89) - 31.1.64

Y. C. HOMBALAYYA,
Secretary to Government.

AGRICULTURE & FOREST SECRETARY 31 JAN 1964 GOVERNMENT OF MYSORE
NO. 515 23 JAN 1964 AGRICULTURE & FOREST DEPTT.
AGRICULTURE & FOREST SECRETARY 268 23 JAN 1964 GOVERNMENT OF MYSORE
THE MINISTER FOR FORESTS & FISHERIES No. F 173/64 30 JAN 1964 BANGALORE

Mahalwadi Plantation - Cy. M/s. W.B. Co.

25

File No. AFD 33 FDP 61 - of 196 .

Mysore Government Secretariat

Serial No. 90.

Ref. paras 86-89/n.t.

The proceedings may be sent to all the officers who attended the meeting on 16.1.64. DFA is asked. 43/c.

3.2.64.
3 4/2

Issue (91)
DR
4/2/64
(T. S. RAMAIYA),
Under Secretary to Government,
Agriculture & Forest Department.

ISSUED
Date 10/2/1964

P. 44/c.s.

Sus-A
10-2-64

Letter No. Az (B) 388/61-62 Dt. 25-2-64 from the C.C.F., Bangalore 92

Please peruse the letter from the C.C.F. It will be seen from the penultimate para of the proceedings that have been forwarded to the concerned officers that item No. IV somehow has remained to be included. Therefore, one draft correction is put up for approval.

(93)

P. 45/c.s.

4-3-64
3 4/3

Issue 94.
DR
4/3/64
(T. S. RAMAIYA)
Under Secretary to Government,
Agriculture & Forest Department.

10/3

Sus-A
11-3-64

ISSUED
Date 11-3-1964.

PROCEEDINGS of the meeting held in the chambers of the Minister for Forests on 18-1-1968 at 2 p.m. to discuss regarding leasing out the lands for raising matchwood plantations by M/s. WIMCO.

-oOo-

PRESENT:-

The Minister for Forests,
The Secy. to Govt., A&FD,
The Chief Conservator of Forests,
The Under Secy. A&FD (Forests)
The Under Secy. C&ID (Sri K.Seshadri Iyengar)
The Under Secy.,F.D (Sri T.K.Rangaraja Iyengar)

The Representatives of M/s.WIMCO:-

1. Sri T.A.Harihara Iyer,
2. Mr. Jan-Olof Guthe.

95) The Minister for Forests raised the preliminary question which was a policy issue viz:- whether it is desirable to lease out the forest land for raising the plantations to the private companies when the Forest Department is supposed to do this work as part of its normal activities. He wanted to know from the C.C.F. whether he has collected the information regarding the availability of the softwoods in this State to cater to the existing industries and also to the extent of availability for being given to the new industries that are likely to come up taking into consideration the applications that have been received in this behalf so far. He also stated that by his talk with the Ministers of other States that the rates given to the industries in Mysore were much low than what the other States were giving in respect of their companies and this, he added, was a source of dissatisfaction among the Industrialists. He also wanted to know whether the C.C.F. had compared the rates that were prevailing in Mysore State to those rates that were prevailing in other neighbouring States and also in Northern India States and how our rates compared with the rates of those States. The C.C.F. stated that these figures were not readily available but indicated that if necessary he will collect the data and furnish the same very early. He also

...2

stated that some time back he had gone to Kerala and, on examination, he found that our rates were ~~fairly higher than~~ lower than the Kerala rates, ~~iif we compare the market rates in both the places.~~ The Minister stated that since then the rates have changed in those places and it is worthwhile to examine them once again. The representatives of ~~the company~~ M/s.Wimco - Sri Harihara Iyer and Sri Jan-Olof Guthe represented that they had come with this request not in order to do the work that ~~the~~ Government are doing but ~~only~~ have come up only to supplement the efforts of Government in this behalf taking into consideration the overall picture of match industry which if proper precaution is not taken would suffer an handicap at a later stage so far as the matchwoods are concerned. They represented that they want to take up this plantation work at agreeing to spend an enormous ~~cost~~ amount mainly with a view to see that the industry do not suffer at ~~the~~ a later stage. If the Government ~~itself~~ were doing this work then they would certainly be very glad to leave it at that because their normal requirement would be assured. They made it very clear that they wanted to take up this work only in areas where Government are not interested. The Minister for Forests clarified that this being a policy issue wanted the overall picture regarding the position viz:- the total requirement of the forest industries and the availability in the State of the raw material to the extent the Government can go ahead with increasing plantation work so as to fulfil the normal requirement of all the companies, the financial implications involved in this and to what extent the Government are prepared to shoulder the responsibility etc.

96) The representatives of the F.D. Sri T.K.Rangaraja Iyengar ~~pointed out that~~ wanted to know as to whether it is

...3

not possible for the department to take up this work itself by spending a few ~~lakks~~ lakhs of rupees and gain the profit themselves, instead of giving on a long term basis to a particular industry which amounts to giving monopoly to a particular company.

97) The Minister for Forests asked the representatives of the Company as to whether they have taken any area anywhere in India for similar purpose. The representatives told the Minister that this was their first venture and they have thought of this for the first time in Mysore since the Mysore is their first love in this field.

98) The representatives also stated that as matchwoods planted can be cut only after a period of 30 years and ~~xxxx

29

(v) whether the proposal of M/s.WIMCO now made can be tackled by the department itself, if so at what cost.

101) It was decided that after the details are received from the C.C.F., the question will be examined in consultation with the F.M., Industries Minister and the Chief Minister as to whether the Government are interested in raising plantations themselves instead of giving this to private sectors. If a decision is taken that Government are not going to agree with the scheme like this to be taken up by themselves then the question of lease to other companies like Wimco would be considered and thereafter the terms and condition being finalised, if need be.

TSR 23/1/64.
(T.S.Ramaiya)
Under Secretary to Government,
Agri. & Forest Dept.

23.1.64.
RN.
22/1

Mysore Government Secretariat

File No. AFD 33 FDP 61 of 196

[App. E. III 2

Serial No.	
	46/C.
102	S.D. No: 137FA - C.F. Shimoga letter No: SAS-63-437/59-60, dt. 19.3.64.
103.	The C.F. Shimoga has informed CCF of his views on the Plantation scheme of M/S W.I.H. Co. Final proposals of CCF in the matter may be awaited.
	21.3.64. (104) 24/3
	46/C.
105.	D. No: 991FA - CCF's letter No: A2(B)388/61-62 dt. 24-2-64. PWD is informatory & may be filed.
	24.4.64. 25/3

Note.—Contn. Sheet

31

Points for discussion with the Hon'ble Minister for Forests, Government of Mysore.

OFFICE OF THE MINISTER FOR FORESTS & FISHERIES
No. 883
9 APR 1964
BANGALORE.

(1) Our letter of 21st February 1963 addressed to the Conservator of Forests, Shimoga Circle, regarding lease of land (20000 acres) in the Sharavati River Valley Submersion Area. Govt. ref: AFD 33 FDP 61 of 7-1-1964. Meeting held in Hon'ble Minister's Chamber on 18.1.1964. For Matchwood Plantations.

GOVT. SECRETARIAT
1857 F-XXX
10 APR 1964
FOREST DEPT. (REGISTRY)

(2) Our letter of 27th September 1963 addressed to the Secretary to Government regarding establishing a Semi-Chemical Pulp & Paper Plant in the Sharavati River Valley Submersion Area.

Forest A 100)

Response of the Government of Mysore to these proposals is requested.

XXX

THE WESTERN INDIA MATCH CO., Ltd.,
P.O.Box 254, Bombay 1.

Represented by Mr. T.A.Harihara Iyer,
Wood Manager.

SAFE

D178PD64

He wants Govt view about giving 20000 acres of land on lease basis for starting Softwood plantation and also to start Semi Chemical pulp. The C.C.F may examine whether it is not possible to raise Softwood plantation departmentally = what would be the probable cost for this scheme. Then may be worked up and a report sent to Govt early.

B. BACHAIAH
Minister for Fore. Fisheries and Sericulture
8.4.64

XXX
Mr. Kaskin
C.C.F to submit a Report to Govt early.
10.4.64

14/4/64

Sri A

F. No: AFD 33 FDP 61.

32

108) Ref. Minutes of Min (F+F), at Para 107/n.f.

49/CF.

109) Draft letter to CCF is submitted for approval.

Int.
28.4.64.

(110) Issue.

29/4

29/4/64
(T. S. RAMAIYA),
Under Secretary to Government,
Agriculture (Forest Department).

AW
2-6-64

51/CF.

111) D. No: 2956FA – Letter dt. 3.7.64 from M/S W. I. M. Co.

112) "The connected file may be put up."

Sd/- Min (F+F)
5.1.64.

113) CCF has been asked to furnish information asked for by the Min (F+F) in his minutes at Para 107/n.f, vide L.X. at Page 49/CF. CCF's reply is still awaited. He may be asked to expedite.

56/CF.

DFA is submitted.

Int.
14.7.64.

Issue at once
14/7/64

ISSUED
Date 15-7-1964

Mysore Government Secretariat | File No. AF 33 FBP 61 of 196 | [App. F. III 2

Serial No. 114

The matter was discussed in the chambers of CM and it was decided that the Govt policy - whether to take up plantations in prime public sector or to encourage plantations in private sector by leasing out the lands - has to be finish arrived at. The C.M said that this ~~no~~ policy decision would be ~~arrived at~~ taken in a month's time. Before putting up a note to CM it is better the matter to discussed in the chambers of Minister Forest on any date suitable to him with CCF, Sec A & F, Secretary C & I, and Sec R.D. and a decision arrived at.

25/7/64
S. SRINIVASAN

Minister Forests

(115) This could be discussed on 4-8-64 at 2 PM.

30.7.64
B. RACHAIAH,
Minister for Forests, Fisheries and Sericulture.

S.A.F.F.

1/8/64.

116. Recd at 5.20 pm

117. Ref. Para supra.
Draft notice of meeting is sent for appl.

18.64.

(118) Done today

1/8/64
(T. S. RAMAIYA),
Under Secretary to Government,
Agriculture & Forest Department.

ISSUED
Date 1-8-1964

Note.—Contn. Sheet

DEPUTY SECRETARY TO GOVT. AGRICULTURE & FOREST DEPTT. NO. 6755 31 JUL 1964
AGRICULTURE & FOREST SECRETARY GOVERNMENT OF MYSORE No. 4636 27 JUL 1964
OFFICE OF THE MINISTER FOR FORESTS & FISHERIES BANGALORE. F No. 1456/64 27 JUL 1964
DEPUTY SECRETARY TO GOVT. AGRICULTURE & FOREST NO. 31 JUL 1964

Subject:- Plantation Scheme — M/S W.I.M. Co — lease of land.

34

File No. AFD 33 FDP 61. of 196 .

Mysore Government Secretariat

Serial No.	
119.	Ref. Papers 114 — 118/n.d. A meeting is scheduled to be held in the chambers of Min (F&F) on 4.8.64 at 3 P.M. to discuss this subject. Notice of meeting has been issued, vide P-57/CF.
120.	The case papers may be passed on to the P.S. to Min (F&F).
121.	JSR 3/8/64 (T. S. RAMAIYA) Under Secretary to Government, Agriculture & Forest Departments. P.S. to Minister for forests. 1.8.64. 1/8
122.	11.8.64. at 3 P.M. BR 3.8.64
123.	Please put up meeting notices. JSR 4/8/64 (T. S. RAMAIYA) Under Secretary to Government, Agriculture & Forest Departments. S. A. 3/8/64
124.	Ref. Paras Supra. 57/CF. Draft is submd. for approval. 5.8.64.
125.	Issue today. JSR 5/8/64 (T. S. RAMAIYA) Under Secretary to Government, Agriculture & Forest Departments.

Since C.F. is not available, min may kindly be postponed to 11-8-64 at 3 P.M. 3/8 - P.S.

Sri A 4/8

OFFICE OF THE MINISTER FOR FORESTS & No. F. 1492/64 3 - AUG 1964 BANGALORE.

AGRICULTURE & FOREST SECRETARY 4921. 4 AUG 1964 GOVERNMENT OF MYSORE

WD-010154—GPB—PZS—500,000—1-10-61

ISSUED 5-8-1964

Subject:- Plantation Scheme of M/S W.I.M. Co — lease of land:

35

Mysore Government Secretariat

File No. AFD 33 FDP 61: of 196

[App. F. III 2

Serial No. 126.

Ref. Paras 122 - 125/n.f.

This case is put down for discussion in the chambers of Min (F+F) on 11.8.64 at 3 P.M. It may be marked to the P.S. to Min (F+F).

5.8.64.

P.S to Minister for Forests

JSR 5/8/64

(T. S. RAMAIYA),
Under Secretary to Government,
Agriculture & Forest Department.

127) Discussed

128) US/F. will put up the proceedings

BR. 11.8.64

B. RACHAIAH,
Minister for Forests,
Fisheries and Sericulture.

JSR 20/8/64

A&F Dept.-Forest 'A' Section

129) As indicated in para 114 n/f, a meeting had been convened in the chambers of the Minister for Forests, on Tuesday the 11th August 1964 at 3 p.m. to discuss the policy question of leasing out the forest areas for raising plantations by the private persons or public bodies when the following were present:-

The Minister for Forests
The Secy. to Govt.,A&FD
The Secy. to Govt.,C&ID
The C.C.F.
The Under Secy.F.D.(Sri Abdul Wajid)
The Under Secy.,A&FD (Forests).

Draft proceedings of the meeting is put up for approval.

JSR 25/8/64
(T.S.Ramaiya)
Under Secy.,A&FD.

DY.SECY.(A&FD) (130) V. M. LINGIAH,
Deputy Secretary,
Agriculture and Forest Department.

SECRETARY(A&FD) (131) G. S. SRINIVASAN,
Secy., Agri. & Forest Dept.

S. (A&F) 31/8 Minister Forests (132) 31/8/64 BR 30.8.64

OFFICE OF THE MINISTER FOR FORESTS & No. F 1528/64 6 AUG 1964 BANGALORE

DEPUTY SECRETARY TO GOVT. No. 1148 25 AUG 1964 AGRICULTURE & FOREST DEPTT.

FOREST SECRETARY 5451 27 AUG 1964

OFFICE OF THE MINISTER FOR FORESTS & FISHERIES No. F 1209/64 AGRICULTURE & FOREST SECT. BANGALORE 31 AUG

File No. AFD 33 FDP 61. of 196.

Mysore Government Secretariat

Serial No.

Ref. Papers 128-132/n.s. Supra.

If approved, copies of the proceedings may be forwarded to all the officers who attended the meeting on 11.8.64 in the chambers of Min (F&F). A letter ~~may~~ will also be addressed to M/S WIMCO to the effect that their request for lease of land to raise Plantations is not acceptable to Govt. 133.

Two drafts are subd. for appl. 61+63/CF. 134.

Draft.
1.9.64.

Drafts may be approved. 135

DEPUTY SECRETARY TO GOVT. NO. 7965 4-SEP 1964 AGRICULTURE & FOREST DEPT.

AGRICULTURE & FOREST 5773 7 SEP 1964 GOVERNMENT OF MYSORE

JR 4/9/64

D.S. 7.9

V. M. LINGIAH,
Deputy Secretary,
Agriculture and Forest Department.

(T. S. RAMAIYA),
Under Secretary to Government,
Agriculture & Forest Department.

The proceedings may go to officers only. Let me see the draft proposed to be issued to WIMCO 136

Seen.

Submitted 7/9/64

8.9

Ref. paras Supra:

Draft letter forwarding the proceedings to Officers is at Page 61/CF and the draft letter addressed to M/S W.I.M. Co. is at Page 63/CF. The draft letters at PP 61+63/CF may kindly be approved. 137.

JR 8/9/64

Issue draft-I & resubmit. 138.

Draft.
10-9.64.

WD-010154—GPB—PZS—8,00,000—1-10-61

ISSUED

Date 23-9-1964

JR 21/9/64

(T. S. RAMAIYA),
Under Secretary to Government,

/DRAFT/

37

PROCEEDINGS OF THE MEETING HELD IN THE CHAMBERS of the Minister for Forests on Tuesday the 11th August '64 at 3 p.m. to discuss the grant of land for raising match-wood plantations to M/s. W.I.M.Co.

=====

PRESENT:

The Minister for Forests,
The Secy. to Govt.,A&FD
The Secy. to Govt., C&ID
The Chief Conservator of Forests,
The Under Secy.,F.D. (Sri Abdul Wajid)
The Under Secy.,A&FD (Forests)

***

139) This meeting was convened as per the decision taken at the ~~last~~ recent meeting held in the C.M.'s chambers, ~~on~~ wherein it had been decided that the matter ~~may~~ might be examined further before arriving at a decision in this behalf, since a policy decision was required, viz: whether Government should take up plantations themselves or whether the public sector or private sector should be encouraged in this behalf.

140) At the outset the Secy.,A&FD stated that if Govt. leased out forest areas on longterm basis, then it would be very difficult to get back lands from the grantees. Moreover the Govt. of India have given their concurrence under Plan Schemes to the State Governments to raise plantations by the departments themselves and this ~~green signal~~ would be used to the best advantage of one and all. The Govt. of India have also assured that necessary funds ~~will~~ would be made available for this purpose. It was urged during the meeting that the percentage of forest in Mysore State ~~is very low~~ being below the standard prescribed, it ~~is not an~~ would not be healthy ~~pro-position~~ proposal to lease out these lands to private factories, individuals etc. ~~since the National wealth will have to be preserved.~~

141) It was also felt that large forest areas have already been granted for putting up buildings,labour colonies etc. to M/s.West Coast Paper Mills, M/s.G.M.R.G.P & Paper Mills Ltd., M/s.Indian Plywood Mfg.Co. and M/s.Electro-Metallurgical Works etc. on lease of Rs.80/- per acre per annum and therefore we should be cautious in leasing further areas in the forests.

....2

38

142) In case industries want raw materials, the CCF stated that this could be supplied by the department itself after knowing the species for example, Softwoods, Matchwoods or other useful timbers ~~are~~ required by each of the industries ~~are~~ made known to him.

The Minister for Forests also suggested that the Department should raise required plantations as is being done now ~~for the sake of~~ for cashew cultivation and thus safeguard the National assets.

143) It was agreed that as a policy, no forest lands should be ~~re~~leased out hereafter to either a private person or ~~a public body~~ private firm for raising plantations ~~of their own accord~~ to supply raw materials.

144) It was also agreed that to meet the requirements of the industries, the Forest Department itself ~~may~~ will take up this work in case the need ~~is~~ is intimated to the department well in time.

ISSUED
Date 23-9-1964

145) Finally, in view of the recommendation of this policy decision, it was agreed that land asked for by M/s.Western India Match Co.Ltd. for raising their plantations, at (i) SVHEP area - all islands and peninsulas to the extent of 10,000 to 15,000 acres as well as other area bounded by the Dam & roads, surrounding the submersion area, to the extent of 5000 acres and (ii) Sringeri/Gangamulla area, cannot be leased out and the CCF may himself take up plantation works departmentally in these forest areas.

TSR 25/9/64

(T.S.RAMAIYA)
Under Secretary to Government,
Agriculture and Forest Department.

RN.

Subject:- Lease of land for raising matchwood Plantations - by M/S W.I.M. Co.

39

Mysore Government Secretariat

File No. AFD 33 FDP 61 of 196

[App. F. III 2

Serial No.

146. Ref. paras 136 & 138/n.7.

Proceedings of the meeting have been sent to the officers who attended the meeting, held on 11.8.64. The file may be submitted to Secy. A&F for perusal of the draft letter (Page 63/CF), addressed to M/S W.I.M.Co.

Int.
23.9.64.
24/9

147) Draft may be approved.
(Ref to Para 136 of N.7)

JR
24/9/64.

(T. S. RAMAIYA),
Under Secretary to Government,
Agriculture & Forest Department,

(148) 25-9

V. M. VENKIAH,
Deputy Secretary,
Agriculture & Forest Department.

Secy. (149) 25/9/64

26-9

(150) Issue
JR
26/9/64

(T. S. RAMAIYA),
Under Secretary to Government,
Agriculture & Forest Department,

ISSUED
Date 29-9-1964

AGRICULTURE & FOREST SECRETARIAT
6103
25 SEP 1964
GOVERNMENT OF MYSORE

DY SECRETARY TO GOVT.
NO. 8520
24 SEP 1964
AGRICULTURE & FOREST DEPTT.

Sub.

Note.—Contn. Sheet

Subject:- Lease of land for match-wood Plantations — request of M/S W.I.M. Co.

Mysore Government Secretariat

File No. AFD 33. FDP 61. of 196.

66/CF.

D. No: 4199 FA - Letter dated 1.x.64 from M/S W.I.M.Co.

Serial No.

In adverting to L.X. at Page 65/CF, M/S W.I.M. Co. state that their present requirement of match-woods is of the order of 36,000 tons per year and it would go upto 54,000 tons per year with the increase in their production. The period of lease of matchwoods of this Co. is upto 31.12.67. The Co. request that it may be extended upto 1980. 151.

The above request of M/S W.I.M. Co. may be considered at the time of reviewing their case, in the main file No: AFD 66 FDP 62 152

The case under review may be kept in 'Sus'. 153

Int. 8.x.64.

(From page 146/n.t).

M. 8/10

The Company has indicated their requirements [Pages 66 to 68 N.7.] and incidentally want their lease period which expires on 31-12-1967 to be extended upto 1980. As indicated in Para 152 N.7 there is ample time to examine their request. And that may be considered when renewal question is taken of this Company as well as those of others. In the meanwhile if agreed to, a copy of the letter (P.V.D) will be sent to C.C.F with a request to offer his remarks 154.

WD-010154-GPB-PZS-8,00,000-1-10-61

Mysore Government Secretariat

Supplementing Govt. efforts by M/s W.I.C.O. Matchwood plantation

File No. 33 PRP of 1961

App. F. III 2

Serial No.	
	on the points raised in the letter.
155	D.S. — 9/10/64 (T. S. RAMAIYA), Secretary to Government, Agriculture & Forest Departments. — V. M. IYENGAR, Deputy Secretary, Agriculture and Forest Departments.
156	Secy. — 20/10 — 13/10/64 G. S. SRINIVASAN, Secy., Agri. & Forest Dept. — 21/10/64
157	Minister for Forests — 19/10/64 B. RACHAIAH, Minister for Forests, Fisheries and Sericulture.
	S. A. & F. — 21/10/64
158.	Ref. papers 154 – 157/a.f. Draft letter to CCF is submitted for approval. 23.X.64. — 26/10
	(159) Issue — 31/10/64 (T. S. RAMAIYA), Under Secretary to Government, Agriculture & Forest Departments.

ISSUED

Date 5-11-1964

Note.—Contn. Sheet

DEPUTY SECRETARY TO GOVT. AGRICULTURE & FOREST DEPTT. NO. 7068 9-OCT 1964

6480 12 OCT 1964 GOVERNMENT OF MYSORE

OFFICE OF THE MINISTER FOR FOREST No. F. 1956/64 13 OCT 1964 BANGALORE.

Ans 5.1.65

Subject:- Land for Matchwood Plantations — request of M/S W.I.M.Co.

File No. AFD 33 FDP 61. of 196	Mysore Government Secretariat	
	Serial No.	
62/CF D. No: 349FA - U.D. No: ND: CF 3883/4/64 Dt 18.1.65.		
The Proceedings of the meeting held in the chambers of Min (F&F) on 11.8.64 has been forwarded on 23.9.64, addressed to the P.A. to Secy. C&I Dept. However one more ~~that Dept. may be~~ ~~copy may be~~ sent to that Dept. ~~requested to this effect~~.	160.	
63/CF- Draft is sub'd. for approval. Int. 21.1.65.	161.	Sub.
Issue (162) JR 27/1/65 (T. S. RAMAIYA)		
Issued [illegible]		

Subject:- Lease of land for raising Plantations — request of M/S W.I.M. Co.

43

COMMERCE & INDUSTRIES DEPARTMENT
MYSORE GOVERNMENT SECRETARIAT.
BANGALORE-1, 22nd Feby 1965

U.O.No.CI 3883-3-64

MYSORE GOVT. SECRETARIAT
No. 10/2/
26 FEB 1965
AGRL. & FOREST DEPT

(163)

Below copy of Minutes of Minister for Commerce and Industries Department dated 12-10-1964 on the Proceedings of the meeting held on 11-8-1964.

- - -

"The decision is rather unfortunate. There should be a co-ordinated effort of all to build up the resources. I do not see the reason why Forest Department should alone have the privilege of raising Forests. The percentage of Forest area should not be a ground for refusing leases of lands to Factories for raising plantations. Leases for Plantations will not reduce the percentage of the Forest lands, on the other hand they are intended to increase the forest areas. This has not been perceived by the Forest Department."

Sd. K. Mallappa
12/10/1964
Minister for Commerce & Industries

- - -

Forwarded to the Agriculture and Forest Department. This has reference to their letter No.AFD 33 FDP 61 dated 23-9-1964.

SN Ramas

(S.N.Ramaswamy)
Deputy Secretary to Government,
Commerce & Industries Department.

26/2/65

Sri A

164) In the meeting held in the chambers of Min (F+F) on 11.8.64 it was decided as a general policy that forest lands should not be leased out to Private Companies for raising Plantations, vide Proceedings at Paras 139 to 145/n.f.

165) The case may be subd. to Min (F+F) for perusal of the minutes of the Min (C&I) at Para 163/n.f. Sup Rea

27.2.65

166) Since Para 163 N.7 is with reference

Land for Malai wood Plantat

AFD 33FDP61

44

to the policy decision taken at the meeting held on 12-8-1964 in the chambers of the Minister for Forests, the file is resubmitted for kind perusal of the opinion of the Hon Minister for Industries, and for orders as to whether any change has to be effected with regard to the decision already taken.

DEPUTY SECRETARY TO GOVT. NO. 2634 8 MAR 1965 AGRICULTURE & FOREST DEPTT.

8/3/65
(T. S. RAMAIYA),
Under Secretary to Government,
Agriculture & Forest Department.

(167) D.S.

8/3/65
(SYED BASHEER AHMED)
Deputy Secretary to Government,
Agriculture and Forest Department.

1267

(168) We may adhere to the policy decision taken ~~[illegible]~~ already.

~~[illegible]~~

See f.

8/3/65
Under Secretary to Government,
Agriculture & Forest Dept.

OFFICE OF THE CONSERVATOR OF FORESTS, BANGALORE. No. F. 426/63

(169) The decision

Minister for Forests

was taken after due consideration

45

Note Continuation Sheet

Subject Land for Plantations — M/S WIPCo. File No. AFD 33 FDP 61.

AFD 33 FDP 61

Reference and markings	Notes and Orders.	Part Numbers
2634	I am sorry that Forest land cannot be leased out for raising plantations by the Cos. The Cos can as well get other kind of lands either from R.D. or from private people. So far as the Forest Department is concerned it can take up large scale afforestation of the requirement & to Industrialist is made known.	
F. 426/65	BR 31.3.65	
1267	S. A. (F)	B. RACHAIAH, Minister for Forests, Fisheries and Sericulture
	Minister (A)	
	Sry (A&F)	Vrw (171) 10/4.
		1/4/65
		Close. Class B
AF 86 FDP.62	12/4/65	12/4/65. 18/11/68

Stitching space

AGRICULTURE & FOREST SECRETARY GOVERNMENT OF MYSORE 12 APR 1965

OFFICE OF THE MINISTER FOR INDUSTRIES & LABOUR No. F 745 1 APR 1965

46

THE WESTERN INDIA MATCH CO., LTD.

BRANCHES AT:
CALCUTTA : MADRAS
BAREILLY

REGISTERED OFFICE:
INDIAN MERCANTILE CHAMBERS,
NICOL ROAD, BALLARD ESTATE,
P. O. BOX 254,
BOMBAY.

TELEPHONE : 262583 (8 LINES)
TELEGRAMS : "WESTMATCH"
CODE : BENTLEY'S

Registered

Your Ref:
Our Ref: H.

April 12, 1961.

The Secretary to Government,
Forests,
Government of Mysore,
BANGALORE.

MYSORE GOVERNMENT SECRETARIAT
NO 3427
18 APR 1961
FOREST BRANCH

Dear Sir,

Matchwood Plantation

We are considering supplementing Governmental efforts at matchwood plantation by our own, but before we can make progress in this direction, it is necessary, you will appreciate, to know what facilities your Government would be prepared to give us to encourage matchwood plantations by us.

We hear that legislation is being undertaken or is likely to be undertaken as regards fixing a ceiling on land holdings. We presume this only applies to land holdings for agricultural purposes and not for matchwood plantations, which would essentially have to be on forest lands and lands adjoining forests.

Yours faithfully,
THE WESTERN INDIA MATCH CO., LTD.,

Manager,
Wood Department.

ARB.

19
15/4

Sri G A

17 2

Appendix F. G.—1]

SUBJECT Matchwood Plantation — Supplementing Govt. efforts by M/S W. I. M. Co.

Diary No. of letter replied to .....

Mysore Government Secretariat.

( )

the 195 .

Date of issue.....

Signed by.....

Issued
JRL
27/4

List of enclosures .....

Copied by.....

Examined by .....

Section

File No.

Serial No.

No. AFD 33 FDP 61. | One

To 27 APR 1961

The C.C.F

I am directed to enclose a copy of letter dt. 12.4.61 from M/S W. I. M. Co. for early remarks.

Y. F.
25/4
U. Secy.

Inst.
24.4.61
25/4

48

No.A2(b)-2881/61-62.

OFFICE OF THE
CHIEF CONSERVATOR OF FORESTS
IN MYSORE, BANGALORE.

DATED: 30-5-1961.

To

The Secretary to Government,
Agriculture and Forest Department,
BANGALORE.

Sir,

Sub:- Matchwood plantation - Supplementing Government efforts by M/S WIMCO.

Ref:- Your No.AFD 38 FDP 61 dated 27-4-1961.

.....

AGRICULTURE & FOREST DEPARTMENT
No. 19
TAPAL SECTION
31/5

The Department is raising about 1,500 to 2,000 acres of Matchwood plantation annually. By the end of the Third Plan, the Department expects to reach the target of 3,000 acres per annum.

2. The WIMCO may be advised to approach the Government Maharashtra with a request to raise matchwood plantations in Kolaba and Ratnagiri Districts so that the matchwood could be transported economically to Ambernath, where the WIMCO'S factory is situated.

MYSORE GOVERNMENT SECRETARIAT
NO. 5036
2 JUN 1961
FOREST BRANCH

3. So far as this State is concerned Matchwood plantations near the coastal regions and railheads would be of greater advantage as they save cost of transport considerably.

4. From para (1) of the Company's letter dated 12-4-1961, it appears that the request is for permitting them to raise matchwood plantation to supplement Government efforts. This cannot be agreed to as no outside agency can be allowed to take up such afforestation works with a view to claiming rights over the consequential produce.

Yours faithfully,

(N.S.Kaikini)
CHIEF CONSERVATOR OF FORESTS.
29/5/61

Appendix F. G.—1]

SUBJECT: Match wood plantation — Supplementary Govt. efforts by WIMCO.

Diary No. of letter replied to .....

Mysore Government Secretariat.

( )

the 195 .

Date of issue: 29 JUN 1961

Signed by .....

List of enclosures .....

Copied by .....

Examined by .....

Section

File No. AFD 33 PDP61

Serial No.

No.. 29 JUN 1961

To

The Manager.
WIMCO. LTD.
Bombay.

Sir:

Sub: As above.

With reference to your letter No. H Dt. 12th April 61, on the Subject mentioned above, I am directed to state that the dept is raising about 1500 to 2000 acres of Match-

5

50

wood plantation annually, and also the Dept. expects to reach the target of 3000 acres per annum by the ending of the third plan.

I am to add that your request for permitting to raise Match wood plantation to supplement Govt. efforts, cannot be agreed as no outside agency can be allowed to take up such afforestation works with a view to claiming rights over the consequential produce.

- Govt will have no objection if the your factory raising matchwood plantations provided Govt are not restricted in raising the rate of royalty according to the market value. I am to request you therefore that the question may be discussed by the representative of your factory with the C.C.F. Bihar and the Secy to Govt. Ind if the factory desires to persue the matter.

Yf.
5/6
U/S.
A+F Dept

3/6.

5/6

Copy to C.C.F (with reference to his letter No. A2(b)-2881/61-62 dated 30.5.61)

51 (6

GOVERNMENT OF MYSORE

No AFD 33 FDP 61.

MYSORE GOVERNMENT SECRETARIAT,
VIDHANA SOUDHA,
Dated, Bangalore, 29 JUN 1961 196

FROM

The *Secretary to the Government of Mysore,*
Agriculture & Forest Department,
Bangalore.

To

The Manager,
Western India Match Company Ltd.,
Bombay.

Sir,

Subject:- Matchwood plantation - Supplementing Governmental efforts by W.I.M.Co.

With reference to your letter No.H, dated the 12th April 1961, on the subject mentioned above, I am directed to state that Government will have no objection if your company raises matchwood plantations provided Government are not restricted in raising the rate of royalty according to the market value. I am to request therefore that the question may be discussed by the representatives of your ~~Company~~ factory with the Chief Conservator of Forests, Bangalore and the Secretary to Government, Agriculture and Forest Department if the factory desires to pursue the matter.

Yours faithfully,

Sd/-

(S.V. Prabhu)
Under Secretary to Government,
Agriculture & Forest Department.

PTO.

Copy to the Chief Conservator of Forests, with reference to his letter No.A2(b)-2881/61-62, dated the 30th May 1961.

(S.V. Prabhu)
Under Secretary to Government,
Agriculture & Forest Department.

KTK/27

53

17

THE WESTERN INDIA MATCH CO., LTD.

BRANCHES AT:
CALCUTTA : MADRAS
BAREILLY

REGISTERED OFFICE:
INDIAN MERCANTILE CHAMBERS,
NICOL ROAD, BALLARD ESTATE,
P. O. BOX 254,
BOMBAY.
REGISTERED.

TELEPHONE : 262583 (6 LINES)
TELEGRAMS : "WESTMATCH"
CODE: BENTLEY'S

Your Ref.
Our Ref.

MYSORE GOVT. SECRETARIAT
17
3 MAY 1962
FOREST DEPT. (TAPPAL SECTION)

April 30, 1962.

The Secretary to the Government of Mysore,
Agriculture & Forest Department,
Vidhana Soudha,
BANGALORE-1.

MYSORE GOVERNMENT SECRETARIAT
NO. 3367
4 MAY 1962
FOREST BRANCH

Dear Sir,

MATCHWOOD PLANTATIONS.

Ref. ? Not-read

As advised you in our letter of 12th April 1961, we are interested in undertaking our own plantations of matchwood on terms mutually acceptable to Government and ourselves. We shall be grateful, therefore, for your kind advice as to the terms on which Government would be prepared to allow us undertake matchwood plantations in areas suited for the purpose. We have in mind, to start with, an area of 1,000 acres.

P-1/CF.

Yours faithfully,
THE WESTERN INDIA MATCH CO., LTD.,

EXECUTIVE DIRECTOR.

Sor A

TSK.

8

54

Appendix F. G.—1]

SUBJECT P- 3/CF.

Diary No. of letter replied to .....

Mysore Government Secretariat,

( )

the 195 .

Date of issue Issued the 16 MAY 1962

Signed by.....

X P-6/CF (Copy).

List of enclosures .....

Copied by.....

Examined by .....

Section

File No.

Serial No.

No. AFD 33 FDP 61. Ed. one

To

The Executive Director,
The W. I. M. Co. Ltd,
Nicol Road, Ballard Estate,
P. O. Box - 254,
Bombay.

7/CF-

With ref. to your letter No. nil, dt. 30-4-62, I am directed to state that your Firm has already been requested to discuss this issue with the CCF and the Secy. A & F. D., vide this Dept. letter of even No. dt. 29.6.61, copy of which is enclosed for ready reference.

With a view to working out the details of your scheme, I am to request you to depute your representative

PTO

9

to discuss the subject matter with the CCF in Mysore and the Secy A&F.D.

y. F.

U. Secy.

Pl. type on I Copy.

3/CF.

Copy to the CCF, w.e.f. his letter No. A 2(h) 2881/61-62 dt. 30.5.69 & in continuation of b.k. quoted above, for further action.

Int.
7-5-62
V 8/5

56

(10

Copy of Government Letter No.AFD 33 FDP 61, dated 29th June 1961 addressed to the Manager, W.I.M.Co., Bombay.

Sub:- Matchwood plantation - Supplementing Governmental efforts by W.I.M.Co.

With reference to your letter No.H, dated the 12th April 1961, on the ~~subject~~ subject mentioned above, I am directed to state that Government will have no objection if your company raised matchwood plantations provided Government are not restricted in raising the rate of royalty according to the market value. I am to request therefore that the question may be discussed by the representatives of your factory with the Chief Conservator of Forests, Bangalore and the Secretary to Government, Agriculture & Forest Department if the factory desires to pursue the matter.

Superintendent,
A. & F.Deptt.

KTK/10

57 (11

Appendix F. G.—1]

SUBJECT P-3/CF.

Diary No. of letter replied to

Mysore Government Secretariat.

( )

the 195 .

Date of issue Issued 8/12/10

3/c.

Signed by

8/c.

List of enclosures

Copied by

Examined by

Section

File No.

Serial No.

No. AFD 33 FDP 61.

To

The C. C. F.

Reference:

1. your letter No. A2(b)2881/61-62 dt. 30-5-61

2. b. L. of even No. dt. 16.5.62.

I am directed to state that during your discussion with the Dy. Secy A & F. D on the subject last week you agreed that some suitable area might be allotted to M/S W. I. M. Co. in Chikmagalur Dist.

I am to request you

PTO

12

to forward specific proposals in this respect with details of the extent of forest area to be released and the terms & conditions.

An early reply is requested.

Yr. F.

Sd/-

U. Secy.

Lm#.
27-9-62.
2-29/9

No.A2-(b)-2881/61-62. Office of the Chief Conservator of Forests in Mysore, Bangalore,
Dated: 19th October, 1962.

To

The Secretary to the Government of Mysore,
Agriculture and Forest Department,
B a n g a l o r e.

Sir,

Subject:--Matchwood Plantations - Supplementing Government efforts by M/s. Wimco. (Western India Match Co., Ltd.).

Reference:--Your No.AFD-33-FDP-61, dated 12th October 1962.

.....

About 5,000 acres of Forest areas covered by the marginally noted localities of Chikmagalur Forest Division are recommended for being leased out to Messrs. The Western India Match Co., Ltd., for raising Matchwood Plantations to supplement the Government efforts.

i). Range of hills running between Sringeri and Karekatte.
ii).Kalasa-Shamse area.

2. The terms and conditions to be stipulated in this connection may be the same as those indicated by Government in the case of areas proposed to be leased out to Paper and Rayon industries in the State for a similar purpose.

Early orders in the matter are requested.

Yours faithfully,

(N. S. Kaikini),
Chief Conservator of Forests.

B.K.19/10/3.

60 114

Appendix F. G.—1j

SUBJECT P- 13/CF.

Diary No. of letter replied to .....

Mysore Government Secretariat.

( )

the 195 .

Date of issue.....

Signed by.....

List of enclosures .....

Copied by.....

Examined by .....

Section

File No.

Serial No.

No. AFD 33 FDP 61.

To

The Executive Director,
The W. I. M. Co.,
Wicol Road, Po
Ballard Estate,
Bombay.

7/CF.

Ref. your letter dated 30-4-62.

I am directed to state that the Mysore Forest Dept has proposed to lease out the following areas in Chikmagalur Forest Div for raising Plantations by ~~to your Company~~

PTO

your Company :—

i. Range of hills running between Shingiki and Kakakatte; and

ii Kalaga-Shamsa area

Your Company will have to pay a rent @ Rs. 80/- per annum for acre for the Govt. lands that will be leased out ~~@ Rs. 5/- for ton of material~~ to you for the proposed raising of ~~extracted in the lease areas so~~ Plantations. The period of lease ~~leased. These rates will be valid~~ will be 30 years in the first ~~for and until the first crop~~ instance ~~raised by your Company is harvested~~.

I am to request you to intimate ~~Yr. F.~~ if your Company is agreeable to take the abovementioned areas ~~to Secy~~ ~~and~~ also to the terms & conditions indicated above. On hearing from you the case will be placed before the Govt. for final orders.

Yr. F.

N.
U. Secy.

Copy to:— 13/CF.

1. The C.C.F., w.r.t. his letter No. A2(b) 2881/61-62 dt. 14.10.62. for info
2. ~~info~~ the C.F. Shimoga
3. ~~the~~ D.F.O. Chikmagalur } For info

14-10-62

(1) Subject:- P- 13/CF.

62 (16

No: AFD 33 FDP 61 Dt: 10.4.63

To

The C.C.F.

Ref. your letter No: A2(b) 2581/61-62 13/CF. dt. 19-10-62.

I am directed to state that this Dept. agrees to lease out the following areas in Shikmagalur Forest Div. for raising Plantations by M/S W.I.M. Co:-

i. Range of Hills running between Sringeri and Karkatte, &

ii. Kalase Shamsa area.

The Co. will have to pay a rent of Rs. 50/- per acre per annum for the Forest lands that will be so leased for the Proposed Plantations. The period of lease will be 30 years, in the first instance, subject to extension by mutual agreement.

I am to request you to ascertain

17

63 (17

ascertain from the Co. whether they are agreeable to take the above-mentioned vessels on the aforesaid terms & conditions. On hearing from you the case will be placed before the Govt. for final orders.

Y. F.

Sd/-

U. Secy.

Mr. 3.4.63 3/4/4

33 P.D.P. 64

64 18

OFFICE OF THE MINISTER FOR FORESTS & EXCISE
No. 780
19 MAR 1963
BANGALORE

THE WESTERN INDIA MATCH CO. LTD
INDIAN MERCANTILE CHAMBERS
MOOL ROAD, BALLARD ESTATE,
BOMBAY 1

S AHF

C.O.F
for report

February 21, 1963.

Y. M. L. Sharma, Esq.,
Conservator of Forests,
Shimoga Circle,
SHIMOGA.
(Mysore State).

B. RACHAIAH,
Minister for Forests,
Excise and Sericulture.

For Report
M. as per
Minister's
Note 19/3/63
Dy 20-3

MYSORE GOVT. SECRETARIAT
No. 2
20 MAR 1963
FOREST DEPARTMENT

Dear Sir,

Re: Lease of Land for Matchwood Plantations.

1. As you are aware, we have for long been interested in raising matchwood plantations to supplement Government's efforts in this direction, having regard to the very serious matchwood supply position that is developing and we have approached the Government of Mysore in the matter.

2. Mr.Stig Wijkstrom, Vice Managing Director of The Swedish Match Company, Jonkoping (Sweden), who has long experience of matchwood plantation in various parts of the world is now, as you know, in India. We are grateful to you for sparing the time and taking the trouble to show him and our Wood Manager, Mr.T.A.Harihara Iyer, round your forests of the Sharavati River Valley Submersion Area and the forests in the Sringeri/Gangamulla area, being possible sites for matchwood plantations as indicated by you.

3. We are pleased to confirm that we are interested in pursuing the idea of matchwood plantations in the areas mentioned below and for your information would also state some of the points which, we believe, should be considered in this connection:

1) Sharavati River Valley Submersion Area: The plantation area should include

(a) all Islands and Peninsulas, expected to cover some 10,000 to 15,000 acres

282

21/3

22/3/63

Sri Las

MYSORE GOVERNMENT SECRETARIAT
NO. 1264/63
FOREST BRANCH

(b) all other land within the area bounded by the Dam and the roads surrounding the Submersion Area, expected to cover some 5,000 acres.

2) Srimori/Gangamulla area: The grasslands on the upper slopes of the hills are not suitable for matchwood plantation and therefore the lands which we would be interested in for matchwood plantations would necessarily have to be restricted to such portions along the valleys and lower slopes which contain a fair portion of good soil and would be suitable for matchwood plantation.

4. We feel that the lease should be for a period of 99 years with the right to cut and utilize the trees planted at any time. The amount of lease rent to be paid may be revised every 30 years, which is expected to be the average period of rotation for matchwood, any increase of the lease rent, however, not to exceed 50% of the original lease rent.

5. For the 20,000 acres mentioned above an annual lease rent for the first period of Rs.50,000/- would be a fair amount considering that it is expected to be possible to convert only some 25-30% of the gross acreage into effective matchwood plantations.

6. It will be appreciated that before the actual field plantings could begin, various preliminary work in the form of surveys, nurseries, living quarters for workmen and staff, experimental plantations, etc., will be necessary. It is therefore suggested that payment of the annual lease rent should be based on the area brought under plantation or our occupation. There should be no other charges or Royalties of any kind to be paid.

The lease should provide:

(a) use of the area for the plantation of matchwood as well as any other tree species as we deem suitable.

(b) use of any part of the land for the erection of any industry without any extra charges.

(c) unrestricted use of the Dam water free of charge for the irrigation of the plantations as well as of any industry which may be established (in connection with these plantations).

(d) the right of way for bringing any product or material to and from the leased area across Government forests land, either reserved forests or other forests or lands under the control of the Revenue Department.

66 20

(e) for the lease period of 99 years the land under lease should not be brought within the purview of any legal enactment restricting the area that may be owned by an individual or a Company.

(f) in the event of the Company closing its factories, the Company should have the right to terminate the lease by 12 months' notice, which may be given at any time.

We are now with great interest looking forward to hear from you.

Yours faithfully,
THE WESTERN INDIA MATCH CO., LTD.,

SMn:H:TSK.

EXECUTIVE DIRECTOR.

— Copy —

67 21

TC 18/6

No: AFD 33 FDP 61 Dt. 19/4/63

To
The C.C.F.

Subject:- P-13/C.F.

I am directed to enclose a letter dt. 21-2-63 from M/S W.I.M.C. for report.

The attached letter of M/S W.I.M.Co may please be returned when done with.

Y.F.
JB
U. Secy.

Issued
19/4/63

Inst.
11.6.63
2/5/4

68 22

OFFICE OF THE
CHIEF CONSERVATOR OF FORESTS
IN MYSORE, BANGALORE

No.A2-(b)-388/61-62 Dated/ 25th May, 1963
Encls (2)

To

The Secretary to Government,
Agriculture & Forest Department,
Vidhana Soudha, Bangalore.

Sir,

MYSORE GOVT. SECRETARIAT (NOW) AGRI. & FOREST DEPT. (TAPPAL SECTION) 27 MAY 1963

Sub:- Lease of land for Matchwood Plantation - Request of M/S Western India Match Co. Ltd.

Ref:- Your letter No.AFD 33 FDP 61 dt. 19.4.1963

--

I am enclosing herewith the Report of the Conservator of Forests in response to this office letter of even no. dated 23.4.1963 calling for remarks on the WIMCO's letter dated 21.2.1963. The Conservator of Forests has dealt with this whole question para by para and I have no objection to allow the Company to develop the areas asked for by it.

27/5/63
GOVERNMENT SECRETARIAT NO. 4388/63 28 MAY 1963 FOREST BRANCH

2. In connection with the comments made by the Conservator of Forests, Shimoga, against para 5 and 6 of the WIMCO's letter referred to above, I should like to state that this Department would, however, like to maintain a couple of islands for developing Tourists' Trade and all these water fronts - (fore-shores) - to a distance of about 100 meters from the top level of the reservoir or water spread should be reserved for the plantation of this Department where we could raise species such as Taxodium, etc., with great advantage.

3. As regards rental to be charged, I do not agree with the proposal of the Conservator of Forests and this could however be decided in a meeting which may be convened by the Government where it could be discussed with reference to the yield that would be obtainable from the plantations raised in these areas. The lease period normally should not be for a period of more than 30 years. But since it is a plantation it could be raised to 99 years with a proviso that if the Company does not use it for the purpose it is meant for, it should immediately revert to the Forest Department irrespective of the various developments undertaken by the Company in that area and without paying them any compensation in that behalf.

4. I am not very much enamoured of the cooperation in the Inter-National Sphere of afforestation, but all the same I would be rather anxious to see that a large portion of our forest, if not the whole of it, is developed to its full utilisation capacity and if we decide to lease the area, it is only with this end in view rather than that expressed by the Conservator of Forests.

5. The original letter dated 21-2-1963 from M/S The Western India Match Co., Ltd., Bombay is returned herewith.

Yours faithfully,

(N.S.Kaikini)
CHIEF CONSERVATOR OF FORESTS

25/5

69 23

Conservator's Office,
Shimoga, dt.

No.SAS.63-437/59-60.
Encl.-

To:

The Chief Conservator of Forests
in Mysore, Bangalore.

Sir,

Sub: Visit of Mr.Stig Wijkstrom, Vice Managing Director of the Swedish Match Co.

Ref: Your No.A2(B)-388/61-62, dated 22/23-4-1963.

Mr. Stig Wijkstrom, Vice Managing Director, The Swedish Match Co., Jonkoping, Sweden visited the following places in Shimoga Circle with me. He was accompanied by Sri T.A.Harihara Iyer, Wood Manager of the WIMCO, India.

(1) Kerekatte - Gangamoola area on 13-2-1963.

(2) The Umblebyle Range (Bhadravati Division) and N.R.Pura (Tarikere Division) Range plantations on 14-2-1963.

(3) The Sharavathy Valley Submersion area and the neighbouring areas in Sagar Forest Division on 15-2-1963.

The purpose of his visit was to select areas suitable for large scale raising of softwood plantations by the WIMCO.

During our visit to the Kerekatte - Gangamoola area of Chikamagalur Division, he also saw the trials made by the Department to plant softwoods in grass-land areas in Agumbe State Forest and of Agumbe Range, Tunga Bhadra State Forest of Sringeri Range, the new softwood nursery at Agumbe etc. Mr. Wijkstrom was interested to see the old plantations of softwoods (Bombax malabaricum) in Umblebyle Range and also the experimental sowings of Ailanthus excelsa in 1961 Kodihalli plantation. He also saw one of the large nurseries of Eucalyptus hybrid, Dalbergia sissoo and teak at Kakanhosudi, and the natural regeneration of Bombax in Umblebyle Range, and in general the high percentage of Bombax in Bhadravati area.

The Sharavathy Valley Submersion area attracted his particular attention, specially, the sites which form islands when waters stand completely in the Reservoir and the areas which project like tongues into the Reservoir and are like peninsulae.

The result of his visit to these areas has been reflected in the enclosed letter of the Executive Director of the WIMCO, submitted herewith in original and which is self-explanatory.

My remarks on the various points raised in the letter are as under:-

The WIMCO are now interested to take on lease land for raising Matchwood plantations.

Para 1.- No comments.

Para 2.- No comments.

..2.

70

Para 3(i)a.- The total area of the islands in the SVHEP reservoir is expected to cover about 3000 to 5000 acres. The peninsulae or narrow tongues of land projecting into the reservoir, and a narrow ring or belt of land with convenient demarcation by means of roads and natural features alround the Reservoir may cover another 15,000 acres i.e. in all 20,000 acres. All the area around the water-spread is not under the control of the Forest Department. The enclosed map prepared by the Divisional Forest Officer, Working Plans indicates very roughly the submersion area with reference to the State Forests abutting the water spread. These will be only about 3 to 4000 acres; but, in order to have an effective area of about 20,000 acres around this Reservoir, part of the areas under the Revenue Department considered for handing over to this Department may also be included. In the interests of preservation of catchment area, it would be worthwhile keeping this under permanent forest cover. The proposal of lease of a narrow belt alround the Reservoir to the WIMCO is worth consideration. No cultivation should be permitted around and if the principle is accepted to lease out, detailed demarcation can be got done by Survey of this narrow belt included in State Forests as well as Revenue lands and islands.

2) The area on both sides of the road from Kerekatte to Suthnabbi falls comprising the slopes and valleys of Tunga and Tunga Bhadra State Forests was also selected by Mr. Nijkstrom. It is possible to obtain another 2000 acres of land here. The tops of hills are bare, shallow soiled and only the slopes and valleys can be tackled. These valleys do not contain any important species like Balagi, Dhuma, etc. and can be conveniently put under softwoods. The firm would also need some fairly good areas with water facilities for raising the nurseries and intial plantations.

A couple of islands in the Linganamakki Reservoir for our use for developing into Bird Sanctuaries may have to be reserved in the Sharavathy Valley Submersion area.

Para 4.- The lease period suggested by the Company may be considered. The Firm would have no doubt a right to utilize the trees planted by them when the same ma ture, but the Firm shall not have any right over the existing natural forest crop timber, firewood or other produce standing on the proposed leased area before prep ing their plantations. The timber, firewood and other forest crop shall be the property of the State Government and only the land shall be leased out. The Company shall pay for timber and firewood required by them for their requirements at the current rates prevailing as fixed by the Department. The conditio increase of the leased rent shall not exce original lease rent at the end of 30 years

Paras 5 & 6.- The Department have at pre areas for taking over afforestation works also afforest all areas all at once, due and staff. Many of the islands in the would have been cleared of timber and fi Kerekatte area consists of major portio with shallow soils and outcrops of roc an the upper reaches. The only good areas w Company can start plantations are in the

and peninsulae areas and experiment on planting in poorer areas and later tackle them intensively. Considering the unfertile and un-productive land, rent of Rs.2-50 nP. per acre for 20000 acres i.e. Rs.50,000/- per year to me appears fair as the Firm will have no right over the standing crop. In this connection, I understand that a large area of 2000 acres of land in Reserve Forest in Coorg Circle (Makut Valley and Sampaje Valley) has been leased on a nominal sum per acre for 999 years and hence the rent of Rs.2-50 nP. proposed by the Company appears fair and the period is shorter. This rent should be payable for the entire area leased out from the date of lease so that the ear-marking of the area can be ensured. If this is agreed to, it does not appear to be necessary to recover any royalty on the quantity of timber produced. It is, however, a matter for the Government to decide the rent to be levied.

Para 7.-

(a) This may be agreed to as long as the site is not used for Agricultural purpose as such a practice is not consistent with the preservation of catchment. They should grow only forest crop, timber and other forest produce.

(b) This may be agreed to as long as the industry is connected with the usage of the crop produced on the leased area.

(c) This is a matter which has to be settled in consultation with the Electricity Department. But, there should be no objection to the use of water by lift irrigation for irrigation of nurseries. Even if irrigated plantations are to be resorted to, then a nominal water rate may be fixed. There would be however no dearth for water in the Reservoir. The use of water for the Industry if any established may be considered favourably on payment of a nominal water rate.

(d) There should be no objection, to this.

(e) This may be agreed to, provided the Firm maintains and protects the status-quo of the catchment area by adopting such measures of soil conservation as necessary while practising forestry operations.

(e) This may be agreed to.

Finally, I have a feeling that the lease of these areas to the WIMCOs is going to be one of the biggest forestry enterprises inviting foreign capital to be spent here, resulting in improvement of forest crops, more rational use of the land, providing labour and employment to a large number of persons unemployed in the country and also adequate revenue to the Department on land that would not normally be tackled by the Department in the immediate future.

I had myself been working out a scheme to grow both softwoods and hardwoods styled 'Foreshore Plantations of Sharavathy Valley', but since the Firm is now interested in this venture and as our own schemes would involve additional expenditure to the State at this time of national emergency, the proposal is worth serious consideration.

72 26

Mr. Jan - olof. Guthe, Technical Manager of WIMCOs also visited the areas during March and expressed keenness in getting through the proposal.

This will also be one of the most unique ventures in the world. The State would be proud of getting into an international sphere of afforestation as we have our Eucalyptus plantations to-day. I, therefore, strongly commend the proposals to the Government.

Yours faithfully,

(Y.M.L. Sharma)
Conservator of Forests.

Encls.- 1) Letter of Executive Director, dt. 21-2-63.
2) One map.

'RAN'

73 27

THE WESTERN INDIA MATCH CO., LTD.

BRANCHES AT:
CALCUTTA : MADRAS
BAREILLY

REGISTERED OFFICE:
INDIAN MERCANTILE CHAMBERS,
NICOL ROAD, BALLARD ESTATE,
P. O. BOX 254,
BOMBAY.

TELEPHONE : 262583 (8 LINES)
TELEGRAMS : "WESTMATCH"
CODE : BENTLEY'S

Your Ref:
Our Ref:

February 21, 1963.

Y. M. L. Sharma, Esq.,
Conservator of Forests,
Shimoga Circle,
SHIMOGA.
(Mysore State).

Dear Sir,

Re: Lease of Land for Matchwood Plantations.

As you are aware, we have for long been interested in raising matchwood plantations to supplement Government's efforts in this direction, having regard to the very serious matchwood supply position that is developing and we have approached the Government of Mysore in the matter.

Mr.Stig Wijkstrom, Vice Managing Director of The Swedish Match Company, Jonkoping (Sweden), who has long experience of matchwood plantation in various parts of the world is now, as you know, in India. We are grateful to you for sparing the time and taking the trouble to show him and our Wood Manager, Mr.T.A.Harihara Iyer, round your forests of the Sharavati River Valley Submersion Area and the forests in the Sringeri/Gangamulla area, being possible sites for matchwood plantations as indicated by you.

We are pleased to confirm that we are interested in pursuing the idea of matchwood plantations in the areas mentioned below and for your information would also state some of the points which, we believe, should be considered in this connection:

1) Sharavati River Valley Submersion Area: The plantation area should include

   (a) all Islands and Peninsulas, expected to cover some 10,000 to 15,000 acres

Recd
27/2/63.

(b) all other land within the area bounded by the Dam and the roads surrounding the Submersion Area, expected to cover some 5,000 acres.

2) Sringeri/Gangamulla area: The grasslands on the upper slopes of the hills are not suitable for matchwood plantation and therefore the lands which we would be interested in for matchwood plantations would necessarily have to be restricted to such portions along the valleys and lower slopes which contain a fair portion of good soil and would be suitable for matchwood plantation.

We feel that the lease should be for a period of 99 years with the right to cut and utilize the trees planted at any time. The amount of lease rent to be paid may be revised every 30 years, which is expected to be the average period of rotation for matchwood, any increase of the lease rent, however, not to exceed 50% of the original lease rent.

For the 20,000 acres mentioned above an annual lease rent for the first period of Rs.50,000/- would be a fair amount considering that it is expected to be possible to convert only some 25-50% of the gross acreage into effective matchwood plantations.

It will be appreciated that before the actual field plantings could begin, various preliminary work in the form of surveys, nurseries, living quarters for workmen and staff, experimental plantations, etc., will be necessary. It is therefore suggested that payment of the annual lease rent should be based on the area brought under plantation or our occupation. There should be no other charges or Royalties of any kind to be paid.

The lease should provide:

(a) use of the area for the plantation of matchwood as well as any other tree species as we deem suitable,

(b) use of any part of the land for the erection of any industry without any extra charges.

(c) unrestricted use of the Dam water free of charge for the irrigation of the plantations as well as of any industry which may be established (in connection with these plantations).

(d) the right of way for bringing any product or material to and from the leased area across Government forests land, either reserved forests or other forests or lands under the control of the Revenue Department.

(e) for the lease period of 99 years the land under lease should not be brought within the purview of any legal enactment restricting the area that may be owned by an individual or a Company.

(f) in the event of the Company closing its factories, the Company should have the right to terminate the lease by 12 months' notice, which may be given at any time.

We are now with great interest looking forward to hear from you.

Yours faithfully,
THE WESTERN INDIA MATCH CO., LTD.,

EXECUTIVE DIRECTOR.

SWm:H:TSK.

INVESTWISELY

INDIAN POSTS AND TELEGRAPHS DEPARTMENT

MYSORE GOVERNMENT SECRETARIAT No. 6695 2 AUG 1963 FOREST BRANCH

AGRICULTURE & FOREST SECRETARY No. 884 22 AUG 1963 GOVERNMENT OF MYSORE

DEPUTY SECRETARY TO GOVT. No. 1416/G 2 AUG 1963 AGRICULTURE & FOREST DEPT.

Code C.

Sent at

Office Clerk

O 1806 AF 487 BOMBAY 21 57 . Y C MONBALAYYA

SECRETARY TO GOVERNMENT AGRICULTURE AND FOREST DEPT

GOVERNMENT OF MYSORE VIDHANA SOUDHA BANGALORE =

= REFERENCE TODAYS TELEPHONE CONVERSATION MUCH OBLIGED FOR

GIVING APPOINTMENT TWENTYSIXTH 2 PM TO OUR EXECUTIVE

DIRECTOR MR AKBAR HYDARI WHO WILL BE CALLING ON YOU

THEN DISCUSS IN PARTICULAR OUR MATCHWOOD PLANTATION

PROPOSAL SHARAVATHI RIVER VALLEY SUBMERSION AREA

BESTREGARDS = HARIHARAIYER =

M. G. S. App. F. G. 3].

MYSORE GOVERNMENT

SECRETARIAT.

(*Continuation sheet draft form*).

1. The Secy. F.D.
2. " " A & F.D.
3. " " C & I. Dept.
4. " " P.W.D.
5. " " The C.C.F.
6) " " The C.F. Shimoga

Opinion.

No: AFD 33 FDP 61 Dt. 77 131

To
The Secy. F.D.
" " C & I Dept.
" " P.W.D.
The C.C.F.
The C.F. Shimoga.

Subject:- Lease of land for raising Matchwood Plantations — request of M/S WIMCO Ltd.

I am directed to state that a meeting, consisting of the officers noted in the margin is scheduled to be held in the chamber of the Min (F&F), Vidhana Soudha, on 17.1.64 at 2 P.M., to discuss the above subject. The Co's ~~has~~ ~~been asked to send their~~ representatives have also been requested to attend the meeting. A note on the subject matter is enclosed.

I am to request you to make it convenient to attend the meeting.

Y. F.
U. Secy.

7.12.63.

WD 012117—GPB—1,00,000—7-3-63

78 32

Note

Subject:- Lease of land for matchwood plantations proposed to be raised by M/s.WIMCO, in S.V.H.E.P. area.

-oOo-

The WIMCO has submitted proposals for raising softwood plantations on the forest lands, giving the details of land and the acreage thereof. The Company requires 20,000 acres approximately at different places in S.V.H.E.P. area and agrees to pay Rs.50,000/- per annum for the land. The comments of the C.F.Shimoga on the terms offered by the WIMCO are as follows:-

Terms offered	Remarks of the C.F.,Shimoga.
1. The Co. will require land in SVHEP area: a) all islands and peninsulas to the extent of 10,000 to 15,000 acres. b) other area bounded by the Dam and roads, surrounding the sub-mersion area, to the extent of 5000 acres.	1. The proposal of lease of the narrow belt around the Reservoir can be considered. The total area of the belt will be approximately 20,000 acres. For the purposes of arriving at the exact area, survey of the belt included in State Forest as well as Revenue lands to be given to Forest Department will have to be done.
2. Sringeri/Gangamulla area: Portions of the vaeely and lower slopes which contain good soil and which are suitable for matchwood plantations.	2. It is possible to obtain another 2000 acres of land in this area, for lease to WIMCO. A couple of islands in the Linganmakki Reservoir may have to be reserved in SVHEP submersion area for developing into Bird Sanctuaries.
3. The lease period may be for 99 years. The amount of lease rent may be revised every 30 years. Any increase of lease rent may not exceed 50% of the original lease rent.	3. The proposal may be accepted as it is fair enough. The Company will not have any right over the existing forest growth on the areas.
4. For the 20,000 acres an annual rent of Rs.50,000/- for the first period(30 years) would be a fair amount.	4. Considering the unfertile and unproductive land to be leased to the Company, the amount of Rs.50000 appears fair. It works up to Rs.2-50 per acre per annum.

...2

5. Payment of lease rent may be based on the area brought under plantation or occupation of the Company.	5. Lease rent should be pyable for the entire area leased out from the date of lease so that the earmarking of the area can be assured. The C.F., however, leaves it to Government to decide the rent to be levied.
6. The Co. suggests that the lease should provide the following points:	
a) use of the area for the plantation of matchwood as well as any other tree species as the Company deems suitable.	May be agreed to, provided the Company grows timber and forest produce and not the agricultural produce of any kind.
b) use of any part of the land for the erection of any industry without any extra charges. ?	May be agreed to as long as the industry is connected with the use of the crop produced on the leased area.
c) unrestricted use of dam-water free of charge for the irrigation of the plantations as well as of any industry which may be established in connection with these plants.	c.(i) This may be decided in consultation with Ele.Dept. (ii) There may not be any objection to the use of water free of charge for irrigation of nurseries. (iii) Even for irrigated plantations, a nominal water rate may be fixed. (iv) The use of water for the industry, if any established, may be on payment of nominal water rate.
d) the right of way for bringing any product or material to and from the leased area across Government Forests or Revenue land.	May be agreed to.
e) for the lease period of 99 years the land under lease should not be brought within the purview of any legal enactment restricting the area that may be owned by an individual or Company.	May be agreed to provided the Company maintains and protects the status quo of the catchment area by adopting such measures of soil conservation as necessary while practising operations.
f) in the event of the Company closing its factories, the Co. should have the right to terminate the lease by 12 months' notice, which may be given at any time.	May be agreed to

...3

80 34

This Scheme of M/s WIMCO envisages supplementing Government's efforts at raising plantations. It will serve double purpose viz: (i) covering barren lands with forests and (ii) giving matchwoods to the Company. Due to large scale disforestment of lands during recent years for agriculture and other purposes, the percentage of forests in the State has considerably decreased. If WIMCO has come up with this bold enterprise to raise plantations at its own cost, it deserves encouragement at the hands of Government. The scheme involves huge expenditure on the maintenance of Plant nurseries and transplanting the trees in suitable areas and then on watering and guarding of the plantations. Softwood trees will normally required 30 years to mature. So, for the initial period of say 30 years the Company will not be able to derive any benefits from these plantations. The proposed lease rent on 20,000 acres at the rate of Rs.50,000 per year, for a period of 30 years will amount to Rs.15,00,000. The expenditure that will be incurred by the Company in raising plantations will be much more than the lease rent for the land. In short, the Company will have to spend lakhs of rupees before harvesting the first crop of matchwoods from the lands leased to them.

The plantation scheme of the VIMCO ~~has~~ was also ~~been sent for the opinion of the~~ referred to C & I Department, for remarks, since this was a new feature that is coming up for the first time in the State. The C & I Department have opined that though Mysore has a rich forest area, there is not much progress ~~based~~ on forest-based industries and the latter have not made much mark in this area. They have also thought that if industries like paper, rayon, Chip Board, matchsticks are

started by the State, then the State itself will required the entire forest resources. Since the private Company that has now come forward if permission is given to them, the scope for the industry if and when undertaken by the State, would naturally gets narrowed down. In view of this the C & I Department have expressed their opinion stating they are not inclined to recommend the grant of this land and it suggested that the A & F. Department themselves may take up the afforstation work.

The plantation schem of M/s WIMCO is expected to be advantageous to the ~~public interest~~ Forest Dept. Different species of softwoods and matchwoods are in great demand by the Industries. The C.C.F. has undertaken afforestations on a large scale. Even when these departmental plantations are mature and fit for exploitation, they will not be in a position to cater to the increasing needs of the industries. The problem of utmost importance is that of funds. In these days of financial stringency so many schemes- Plan as well as non-Plan - are faced with the difficult situation of non-availability of funds.

The Schemes of M/s WIMCO if given a trial, will produce matchwoods in sufficient quantity in Sharavathy area, and consequently the other forest areas of the State will be free to cater to the needs of the local match industries. Apart from producing matchwoods, the scheme will go a long way in giving firewood for fuel and charcoal in the shape of lops and tops.

The case will be discussed at a meeting in the chambers of the Minister for Forests and Fisheries on 17-1-1964 at 2 P.M.

24/12

24/12/63
U. Sec.

By registered Post 82/36

M. G. S. App. F. G. 3].

MYSORE GOVERNMENT

SECRETARIAT.

(*Continuation sheet draft form*).

No: AFD 33 FDP 61 Dt.

To

The Executive Dr.
W. I. M. Co. Ltd.
Nicol Road, Ballard Estate,
P. B. No: 254, Bombay.

Subject:— P-31/CF.

With ref. to your letter of 21.1.63 addressed to the C.F. Shimoga, I am directed to state that a meeting is scheduled to be held in the chambers of the Min (Ft) on 17.1.64 at 2 P.M, to discuss the above mentioned subject matter.

I am to request you to send ~~your~~ representatives of your Co. ~~of your Co~~ to attend the aforesaid meeting. ~~and~~

The receipt of this letter may be acknowledged.

Y. F.

U. Secy.

7.12.63
2 20/12

WD 012117—GPB—1,00,000—7-3-63

83
37

GOVERNMENT OF MYSORE

NO.AFD 33 FDP 61

Mysore Government Secretariat,
Agri. & Forest Department,
Bangalore, Dated 7-1-1964

From

The Secretary to the Government of Mysore,
Agriculture and Forest Department.

To

The Secretary to Government, Finance Department.
-do- , Commerce and Industries Department.
-do- , Public Works Department.
The Chief Conservator of Forests in Mysore, Bangalore.
The Conservator of Forests, Shimoga.

Sir,

Sub: Lease of land for raising Matchwood Plantations - Report of M/s WINCO

I am directed to state that a meeting, consisting of the officers noted in the margin is scheduled to be held in the chambers of the Minister for Forests and Fisheries, Vidhana Soudha, on 17-1-1964 at 2.00 P.M., to discuss the above subject. The Company's representatives have also been requested to attend the meeting. A note on the subject matter is enclosed.

1. Secretary to Government, Finance Dept.
2. -do- , Agri. & Forest Dept.
3. -do- , Public Works Dept.
4. -do- , Commerce & Industries Dept.
5. Chief Conservator of Forests, Bangalore.
6. Conservator of Forests, Shimoga.

I am to request you to make it convenient to attend the meeting.

Yours faithfully,

ISSUED
Date 7/1/1964

J. S. Ramaiya
Under Secretary to Government,
Agriculture and Forest Department.

84 38

N O T E

Sub: Lease of land for Matchwood Plantations proposed to be raised by M/s WIMCO in S.V.H.E.P area.

The WIMCO has submitted proposals for raising softwood plantations on the forest lands, giving the details of land and the acreage thereof. The Company requires ~~xx~~ 20,000 acres approximately at different places in S.V.H.E.P. area and agrees to pay Rs.50,000/- per ann m for the land. The comments of the Conservator of Forests, Shimoga on the terms offered by the WIMCO are as follows:-

TERMS OFFERED	REMARKS OF THE CONSERVATOR OF FORESTS SHIMOGA
1. The Company will ~~xx~~ require land in SVHEP area: a) all islands and peninsulas to the extent of 10,000 to 15,000 acres. b) other area bounded by the Dam and roads, surrounding the sub-mersion area, to the extent of 5000 acres.	1. The proposal of lease of the narrow belt around the Reservoir can be considered. The total area of the belt will be approximately 20,000 acres. For the purposes of arriving at the exact area, survey of the belt included in State Forest as well as Revenue lands to be given to Forest Department will have to be done.
2. Sringeri/Gangamulla area: Portions of the vaeely and lower slopes which contain good soil and which are suitablefor matchwood plantatin	2. It is possible to obtain another 2000 acres of land in this area, for lease ~~xx~~ to WIMCO. A couple of islands in the Lingamakki Reservoir may have to be reserved in SVHEP submersion area for developing into Bird Santuarie
3. The lease period may be for 99 years. The ~~a~~ amount of lease rent may be revised every 30 years. Any increase of lease rent may not exceed 50% of the original lease rent.	3. The proposal may be accepted as it is fair enough. The Company will not have any right over the existing forest growthon the area.
4. For the 20,000 acres ~~an~~ annual rent of Rs.50,000/- for the first period (30 years) woula be a fair amount.	4. Considering unproducti to the Co Rs.50,000 works up per annu
5. Payment of lease rent may be based on the area brought under plantation or occupation of the Company.	5. Lease for fr e a

6. The Company suggests that the lease should provide the following points:

a) Use of the area for the plantation of matchwood as wellas any other tree species as the Company deems suitable.	May be agreed to, provided the Company grows timber and forest produce and not the agricultural produce of any kind.
b) Use of any part of the land for the erection of any industry without any extra charges.	May be agreed to as long as the industry is connected with the use of the crop produced on the leased area.
c) Unrestricted use of dam water free of charge for the irrigation of the plantations as well as of any industry which may be established in connection with these plants.	(i) This may be decided in consultation with the Electric Department. (ii) There may not be any objection to the use of water free of charge for irrigation of nurseries (iii) Even for irrigated plantations a nominal water rate may be fixed. (iv) The use of water for the industry, if any established, may be on payment of nominal water rate.
d) The right of way for bringing any product or materialto and from the leased area across Government Forests or Revenue land.	May be agreed to.
e) for the lease period of 99 years the land under lease should not be brought within the purview of any legal enactment restricting the area that may be owned by an individual or Company.	May be agreed to provided the Company maintains and protects the status quo of the catchment area by adopting such measures of soil conservation as necessary while practising operations.
f) in the event of the Company closing its factories, the Company should have the right to terminate the lease by 12 months' notice, which may be given at any time.	May be agreed to.

This Scheme of M/s WIMCO envisages supplementing Government's efforts at raising plantations. It will serve double purpose viz: (i) covering barren lands with forests and (ii) giving matchwoods to the Company. Due to large scale disforestment of lands during recent years for agriculture and other purposes, the percentage of forests in the State has considerably

.... 3)

decreased. If WIMCO has come up with this bold enterprise to raise plantations at its own cost, it deserves encouragement at the hands of Government. The scheme involves huge expenditure on the maintenance of Plant nurseries and transplanting the trees in suitable areas and then on watering and guarding of the plantations. Softwood trees will normally required 30 years to mature. So, for the initial period of say 30 years the Company will not be able to derive any benefits from these plantations. The proposed lease rent on 20,000 acres at the rate of Rs.50,000 per year, for a period of 30 years will amount to Rs.15,00,000. The expenditure that will be incurred by the Company in raising plantations will be much more than the lease rent for the land. In short, the Company will have to spend lakhs of rupees before harvesting the first crop of matchwoods from the lands leased to them.

The plantations scheme of the WIMCO was also referred to Commerce and Industries Department, for remarks, since this was a new feature that is coming up for the first time in the State. The Commerce and Industries Department have opined that though Mysore has a rich forest area, there is not much progress on forest-based industries and the latter have not made much mark in this area. They have also thought that if industries like Paper, Rayon, Chip Board, Matchsplints are started by the State, then the State itself will required the entire Forest resources. Since the private Company that has now come forward if permission is given to them, the scope for the industry if and when undertaken by the State, would naturally gets narrowed down. In view of this the Commerce and Industries Department have expressed their opinion stating they are not inclined to recommend the grant of this land andit suggested that the Agriculture and Forest Department themselves may takeup the afforestation work.

The plantation scheme of M/s WIMCO is expected to be advantageous to the Forest Department. Different species of softwoods and matchwoods are in great demand by the Industries. The Chief Conservator of Forests has undertaken afforestations on a large scale. Even when these departmental plantations are mature and fit for exploitation, they will not be in a position to cater to the increasing needs of the industries. The problem of utmost importance is that of funds. In these days of financial stringency so many schemes - Plan as well as

.....

non-Plan are faced with the difficult situation of non-availability of funds.

[redacted]

The Schemes of M/s WIMCO if given a trial, will produce matchwoods in sufficient quantity in Sharavathy area, and consequently the other forest areas of the State will be free to cater to the needs of the local match industries. Apart from producing matchwoods, the scheme will go a long way in giving firewood for fuel and charcoal in the shape of lops and tops.

The case will be discussed at a meeting in the chambers of the Minister for Forests and Fisheries on 17-1-1964 at 2.00 P.M.

•••••

T. S. Ramaiya 7/1/64

(T. S. RAMAIYA),
Under Secretary to Government,
Agriculture & Forest Department,

33 FDP 61.

88 42

THE WESTERN INDIA MATCH CO., LTD.

BRANCHES AT:
CALCUTTA: MADRAS
BAREILLY

REGISTERED OFFICE:
INDIAN MERCANTILE CHAMBERS,
NICOL ROAD, BALLARD ESTATE,
P. O. BOX 254,
BOMBAY.

TELEPHONE : 262583 (8 LINES)
TELEGRAMS : "WESTMATCH"
CODE: BENTLEY'S

Your Ref: AFD 33 FDP 61.

Our Ref: CVG.

January 11, 1964.

MYSORE GOVT. STORES
No. 268/5/A
17 JAN 1964
AGRL & FOREST DEPT (BGL)

The Under Secretary to Government,
Government of Mysore,
Agriculture and Forest Department,
Vidhana Soudha,
BANGALORE.

Dear Sir,

Lease of Land for
Matchwood Plantations.

We thank you for your letter dated 7th January and are glad to note that a meeting is scheduled to be held in the Chambers of the Hon'ble Minister for Forests & Fisheries on 17th January 1964 at 2-00 P.M. to discuss the above subject.

We are pleased to advise that Mr.Jan-Olof Guthe, our Technical Manager, and Mr.T.A. Harihara Iyer, our Wood Manager, will attend the above meeting on our behalf.

Yours faithfully,
THE WESTERN INDIA MATCH CO., LTD.,

EXECUTIVE DIRECTOR.

TSK

Noted — this may be filed.

21.1.64.

21/1

21/1/64
U. Secy.

Pl. type & Copies with Proceedings 39 (43

U.O. No: AFD 33 FDP 61 Dt. 10/2/64

Subject:- Page 37/CF.

37/CF.

Ref. letter No: AFD 33 FDP 61 dt. 2.1.64.

A copy of the proceedings of the meeting held on 18.1.64 in the chambers of the Hon (F&F) on the above subject is enclosed for information.

U. Secy.

To
1. The P.S. to Hon (F&F)
2. The P.A. to Secy. A&F.D.
3. The U. Secy. C&I Deptt (Sri K. Sheshadri Iyengar)
4. The U. Secy. F.D (Sri T.K. Rangaraja Iyengar).
5. The C.C.F. who please furnish the information called for in penultimate Para of the Proceedings for further action.

Dr#.
3.2.64. 2 4/2

44 90

No.A2(B)388/61-62.

CHIEF CONSERVATOR'S OFFICE.
Bangalore, dated, 24th February, 1964.

25

To

The Secretary to Government,
Agriculture & Forest Department,
Vidhana Soudha,
Bangalore.

MYSORE GOVT. SECRETARIAT
No. 999/R
26 FEB 1964
AGRI. & FOREST DEPT. (REGISTRY)

Sub:-Lease of land for raising matchwood plantations
Report of M/s WIMCO.

Ref:-Your No.AFD 35 FDP 61 dated 10-2-1964.

It was indicated in your above letter that the particulars called for in the penaltimate para of the proceedings should be furnished. A perusal of the copy of the proceedings received here does not indicate item (iv). What this item (iv) is may please be furnished to enable this office to take further action.

early

Yours faithfully,

Chief Conservator of Forests.

Iyer.

AFD 33 FDP 61

45 91 M. G. Sadh; V. S., Bangalore -3-64

M. G. S. App. F. G. 3].

MYSORE GOVERNMENT

SECRETARIAT.

(*Continuation sheet draft form*).

Erratum

Subject:- Lease of land for raising Matchwood Plantations - Report of M/s Wimco

In the penultimate para of the proceedings of the Meeting held on 18-1-64 in the Chambers of the Minister for Forests & Fisheries forwarded with U. O. Note No. AFD 33 FDP 61 dt. 10-2-64 the following item should be inserted after item No. (iii) & before item No. V.

(iv) the amount required for taking up this plantation work; and

B. 44 C.S.

U. S., A. & F. Depts

To, The P. S. to the Minister for Forests

The P.A. to Secy to Govt, A. & F. Depts

U. S. to Govt; C. & I. Depts

U. S., F.D.

The C.C.F., Bangalore.

The Cons. of Forests, Shimoga.

WD 012117—3PB—1,00,000—7-3 63

33 FDP 61

92 46

No. SAS-63-437/59-60.
Encl:-

Conservator's Office,
Shimoga. dt

19 MAR 1964

To

The Chief Conservator of Forests
in Mysore, Bangalore.

MYSORE GOVT. SECRETARIAT
No. 14625 Sec. 7/B
20 MAR 1964
AGRL & FOREST DEPT

Subt Lease of land for raising matchwood plantations - Report of M/s WIMCO
U.O.Notlee No. AFD. 33 FDP. 61 dated 10-2-64 copied to me.

-oOo-

SD137/FR/64 20/3/64

F/B

In this connection I invite your reference to my letter No.SAS.63 -437/59-60 dated 10-2-64 ~~that~~ indicating the position of availability of softwoods in Shimoga Circle, the quantum of extraction and the extent of and period of extraction as well as financial implications involved to achieve the ~~x~~ tempo of afforestation needed.

As could be seen from the reference cited above, in another decade the position of softwoods supply from our State Forests will be dwindling. The rate of growth of these softwood trees in our natural evergreen forests is not so fast as to enable many of the preselection class to reach the selection limit in the course of the next ten years though of course some would. We have not much statistics on the rate of growth of these species. It is, therefore, necessary that we should achieve the target of plantations that we would normally achieve in 30 years during the next 6 or 10 years. If we were to do this in the interests of maintaining at least a sustained supply 30 years after today, we have to plan in a big way. For this the state will be unable to find funds ~~xx~~ to the extent desired.

The State Forest areas abutting the Sharavathi Valley area only about 4000 acres. We need not consider the release of any State Forest areas, but the question of release of lands belonging to the Revenue Department may be considered. This would be a valid argument to take over immediately the revenue lands to the control of the ForestDepartment. The company is not interested in the malki. They require lease of land only and facilities to supplement growing of softwoods and establish a semi chemical wood pulp unit. They also need lops and tops from our forests and ~~plus they~~ they Plantations grow. The cry for match timber and softwood in general is great. If WIMCO can supplement our efforts to that extent the local demand of match splint industries can be met with by ~~uniform~~ us from our plantations.

In Shimoga Circle alone if we are to achieve the target in 6 years we need to raise at ten thousand acres annually which involves an outlay of at least 25.00 lakhs per year. This would mean for all ~~x~~ three circles (Coorg, Shimoga and Belgaum) we may need nearly 0.75 crore per year for raising softwoods alone. I wonder if this much of grant would be forthcoming. Our staff is meagre and limited to take up afforestation of this magnitude. The proposal does not deplete the forest area in the State. On the other hand, it will improve the position. The work will produce good results. It will invite foreign capital and increase employment potential in the State. Catchment is protected. Area under more useful species is increased, instead of the vandalism of clearance of catchment for agriculture. The company does not want the standing growth ~~x~~ but pays for everything it takes.

...2/-

47)

93

Government may ask if we release lands to this Company other companies may also make similar approach for land. Each case should be considered on its merits, and decided. A bold revised and radical approach to the problem is needed today than the stereotyped outlook that the State alone should raise the raw materials.

It is with this idea that the scheme was commended by me. Government can enforce a condition that if the firm does not show substantial progress within five years the lease can be terminated at short notice. I am reiterating my recommendation purely in the larger interest of the State, forestry and industry in the State. A copy of my letter cited above and a copy of my No. SAS. 63-427/59-60 dated 28-12-63 regarding the extent of plantations required to be raised and the possibility of extent of lops and tops available are submitted herewith for ready reference. I have submitted herewith a copy of this letter to the Secretary to Government for information.

Yours faithfully,

Sd/-
(Y.M.L.Sharma)
CONSERVATOR OF FORESTS.

Copy submitted to the Secretary to Government, Agriculture and Forest Department, Bangalore for information.

Y.M.L. Sharma
CONSERVATOR OF FORESTS. 12/73

33 FDP 61

94 (48

No.A2(B)338/61-62.

CHIEF CONSERVATOR'S OFFICE.
Bangalore, dated, 24th Feb: 1964.

To

The Chief Conservator of Forests,
Kerala/Andhra Pradesh/Madras/West Belgal/Uttar Pradesh
Mahatashtra/Orissa/Bihar.

Sir,

Sub:-Removal of matchwoods by M/s Western India Match Co.Ltd.,

Government of Mysore want the following particulars immediately.

i) what are the terms under which the lease for removal of standing timbers by M/s Western India Match Co.,have, if any, been granted in your State.

ii) what are the species allowed to be extracted by the above Company.

iii) If the Company is not allowed to remove the standing timbers but only the supplies of timber of the species required are made by the Forest Department, what are these terms.

iv) what is the rate/price fixed per cft. of timber removed/ supplied to WIMCOs and when and to what limits are these rates subject to revision.

I am therefore to request you to supply the above information at your earliest convenience.

Yours faithfully,

sd/-

Chief Conservator of Forests
in Mysore, Bangalore.

Copy submitted to the Secretary to Government, Agriculture and Forest Department, Bangalore for information with reference to his No.AFD 33 FDP 61 dt.10-2-1964.

Iyer.

43/CP.

Chief Conservator of Forests.

Iyer.

95 (49

Appendix F. G.—1]

SUBJECT ..... Page 31/CF.

Diary No. of letter replied to.....

Mysore Government Secretariat.

( )

the 196.

Date of issue.....

Signed by.....

ISSUED

Date 1.5.1964

List of enclosures.....

Copied by.....

Examined by.....

Section

File No.

Serial No.

NO: AFD 33 FDP 61.

To

The CCF. 46/CF.

Ref. C.F. Shimoga letter No: SAS-63-437/59-60, dt. 19-3-64, addressed to you & copied to this Dept.

I am directed to request you to offer remarks on the above letter very early.

Govt. desire that you may kl. examine whether it is not possible to raise soft-wood plantation departmentally and what would be the probable cost for

PTO.

50)

96

this Scheme.

An early reply is requested.

Y. F.

U. Secy.

28.4.64.

29/4

97 51

THE WESTERN INDIA MATCH CO., LTD.

BRANCHES AT:
CALCUTTA: MADRAS
BAREILLY

REGISTERED OFFICE:
INDIAN MERCANTILE CHAMBERS,
NICOL ROAD, BALLARD ESTATE,
P. O. BOX 254,
BOMBAY.

TELEPHONE : 262583 (8 LINES)
TELEGRAMS : "WESTMATCH"
CODE: BENTLEY'S

Your Ref:
Our Ref:

S. Ag
The connected file may be put up

B. RACHAIAH
Minister for Forests,
Industries and Services.

OFFICE OF THE MINISTER FOR FORESTS
No. 1242
17 JUL 1964
BANGALORE

July 3, 1964.

MYSORE GOVT. SECRETARIAT
No. 29561/A/A
9 JUL 1964
AGRL & FOREST DEPT. (REGISTRY)

Sri S. Nijalingappa, B.A., LL.B.,
Hon'ble Chief Minister,
Government of Mysore,
Vidhana Soudha,
BANGALORE.

Dear Sir,

Lease of Land for Matchwood Plantations.

Put up
B 9/7

We are interested in undertaking matchwood plantations in the Sharavati River Valley Submersion Area and our proposal was, in the first instance, contained in our letter dated 21st February 1963 addressed to the Conservator of Forests, Shimoga Circle, as per copy enclosed. The matter has since been discussed between us and your Government. We have yesterday had the pleasure of discussing this subject with your Hon'ble Minister for Forests, who was passing through Bombay.

At present, the matchwood requirements of the Match Industry of India are of the order of 120,000 tons of 50 c.ft. each and by 1983 this figure is expected to go up to 200,000 tons. The matchwood resources of India are fast dwindling and the Industry has great difficulties in getting adequate quantities of matchwood, and already in several parts of the country, the beginnings of a shortage of this essential commodity — matches — are noticeable. In the critical situation that is now developing, we feel that the Industry also should put its shoulders to the wheel of reafforestation in an endeavour to supplement Government's efforts in this direction. Our Associates abroad have extensive experience of matchwood plantations

98 | 52

in different parts of the world and we can freely draw on their vast experience if we are given an opportunity of having our own plantations in your State.

We understand that it takes about 30 years for matchwood trees to reach maturity and we feel that, to be economical, it would be necessary to have a lease covering three periods of plantation. We gather that giving out land on long-term lease for plantation purposes involves a question of Government policy and we therefore take the liberty of approaching you in the matter. Our representatives would only be too pleased to call on you whenever you so desire.

Yours faithfully,
THE WESTERN INDIA MATCH CO., LTD.,

EXECUTIVE DIRECTOR.

Encl.
H.TSK.

99 | 53

(TRUE COPY)

February 21, 1963.

Y. M. L. Sharma, Esq.,
Conservator of Forests,
Shimoga Circle,
SHIMOGA.
(Mysore State).

Dear Sir,

Re: Lease of Land for Matchwood Plantations.

As you are aware, we have for long been interested in raising matchwood plantations to supplement Government's efforts in this direction, having regard to the very serious matchwood supply position that is developing and we have approached the Government of Mysore in the matter.

Mr.Stig Wijkstrom, Vice Managing Director of The Swedish Match Company, Jonkoping (Sweden), who has long experience of matchwood plantation in various parts of the world is now, as you know, in India. We are grateful to you for sparing the time and taking the trouble to show him and our Wood Manager, Mr.T.A.Haribara Iyer, round your forests of the Sharavati River Valley Submersion Area and the forests in the Sringeri/Gangamulla area, being possible sites for matchwood plantations as indicated by you.

We are pleased to confirm that we are interested in purusing the idea of matchwood plantations in the areas mentioned below and for your information would also state some of the points which, we believe, should be considered in this connection:

1) Sharavati River Valley Submersion Area: The plantation area should include

(a) all Islands and Peninsulas, expected to cover some 10,000 to 15,000 acres

Copy hereof is already on the file at Page 27/cF.
14.7.64.

100 54

(b) all other land within the area bounded by the Dam and the roads surrounding the Submersion Area, expected to cover some 5,000 acres.

2) Sringeri/Gangamulla area: The grasslands on the upper slopes of the hills are not suitable for matchwood plantation and therefore the lands which we would be interested in for matchwood plantations would necessarily have to be restricted to such portions along the valleys and lower slopes which contain a fair portion of good soil and would be suitable for matchwood plantation.

We feel that the lease should be for a period of 99 years with the right to cut and utilize the trees planted at any time. The amount of lease rent to be paid may be revised every 30 years, which is expected to be the average period of rotation for matchwood, any increase of the lease rent, however, not to exceed 50% of the original lease rent.

For the 20,000 acres mentioned above an annual lease rent for the first period of Rs.50,000/- would be a fair amount considering that it is expected to be possible to convert only some 25-50% of the gross acreage into effective matchwood plantations.

It will be appreciated that before the actual field plantings could begin, various preliminary work in the form of surveys, nurseries, living quarters for workmen and staff, experimental plantations, etc., will be necessary. It is therefore suggested that payment of the annual lease rent should be based on the area brought under plantation or our occupation. There should be no other charges or Royalties of any kind to be paid.

The lease should provide:

(a) use of the area for the plantation of matchwood as well as any other tree species as we deem suitable.

(b) use of any part of the land for the erection of any industry without any extra charges.

(c) unrestricted use of the Dam water free of charge for the irrigation of the plantations as well as of any industry which may be established (in connection with these plantations).

(d) the right of way for bringing any product or material to and from the leased area across Government forests land, either reserved forests or other forests or lands under the control of the Revenue Department.

(e) for the lease period of 99 years the land under lease should not be brought within the purview of any legal enactment restricting the area that may be owned by an individual or a Company.

(f) in the event of the Company closing its factories, the Company should have the right to terminate the lease by 12 months' notice, which may be given at any time.

We are now with great interest looking forward to hear from you.

Yours faithfully,
THE WESTERN INDIA MATCH CO., LTD.,

Sd/-

SWm:H:TSK. EXECUTIVE DIRECTOR.

Copied:TSK.
3-7-1964.

108 (56

Appendix F. G. -1]

SUBJECT .....P-31/CF.....

Immediate.

Diary No. of letter replied to..... .....

Mysore Government Secretariat.

( )

the 196 .

Date of issue..... ISSUED Date 15-2-1964

Signed by.....

Section

File No.

Serial No.

No. AFD 33 FDP 61

To

The C.C.F.

49/CF.

Ref. C.X. of even No. dt. 1.5.64.

I am directed to request you to furnish the information called for in the above quoted letter urgently.

Y. F.

14/2

U. Secy. F/C

List of enclosures.....

Copied by .....

Examined by.....

14.2.64.

103 (57

U. D. No: AFD 33 FDP 61 Dt.

U. D. Note.

Subject:- Lease of land for raising match-wood Plantations — request of M/S W. L. M. Co.

Reference:

37/C.F. 1. A & F.D's letter No: AFD 31 FDP 61 dt. 7.1.64.

43/C.F. 2. " U.D. No: AFD 31 " " dt. 10.2.64.

~~The Subject matter~~

A meeting will be held in the chambers of Min (F & F) on 4-8-64 at 3 P.M. to discuss the above subject matter.

The following officers are requested to make it convenient to attend the meeting:—

1. The Secy. A & F.D.
2. The " C & I Dept.
3. The " F. D.
4. The C.C.F.

A note on the subject has been forwarded through A & F.D's letter of 7.1.64 quoted above. 37/C.F.

ISSUED
1-8-1964

1/8/64
U. Secy.

To
1. The Secy. A & F.D.
2. The " C & I. Dept.
3. The " F. D.
4. The C.C.F.

1.8.64

104 56

GOVERNMENT OF MYSORE

No.AFD 33 FDP 61

Mysore Government Secretariat,
Vidhana Soudha,
Bangalore-1,

Dated; 1st August 1964.

U.O.NOTE

Subject: Lease of land for raising match-wood plantations - Request of M/s. W.I.M.Cp.

****

Ref:- (i) A&FD's letter No. AFD 31 FDP 61 dt. 7-1-64
(ii) A&FD's U.O. No. AFD 31 FDP 61 dt. 10-2-1964.

A meeting will be held in the chambers of the Minister for Forests and Fisheries on 4th August 1964 at 3 p.m. to discuss the above subject matter.

Thef following officers are requested to make it convenient to attend the meeting:-

1. The Secretary to Government, A&F Dept.,
2. The Secretary to Government, C&I Dept.,
3. The Secretary to Government, F.D.
4. The Chief Conservator of Forests in Mysore, Bangalore.

A note on the subject has been forwarded through A&FD's letter of 7-1-1964 quoted above.

ISSUED
Date 1-8-1964

T.S. Ramaiya
(T.S.RAMAIYA)
Under Secretary to Government,
Agriculture and Forest Department.

O/C

To

The Private Secretary to the Minister for Forests & Fisheries,
The Secretary to Government, Agriculture & Forest Dept.,
The Secretary to Government, Commerce & Industries Dept.,
The Secretary to Government, Finance Department,
The Chief Conservator of Forests in Mysore, Bangalore.

RN
1/8

105 (59

U.O. No: AFD 33 FDP 61 Dt.

U.O. NOTE

Subject:- P - 58/CF. 58/CF.

Ref. U.O. note No: AFD 33 FDP 61 of 1-8-64.

The meeting on the above subject which was fixed for 4.8.64, has been postponed to 11-8-64 at 3 P.M.

The following officers are requested to make it convenient to attend the meeting in the chambers of Hon (F + F) on 11-8-64 at 3 P.M.

1. The Secy. A & F.D.
2. " " C & I Deptt
3. " " F.D.
4. The C.C.F.

ISSUED
Date 5-8-1964

U. Secy.

To

The P.S. to Hon (F & F).
The ~~P.A. to the~~ Secy. A & F.D.
The ~~P.A. to~~ " C & I Deptt
The ~~P.A. to~~ " F.D.
The C.C.F.

5.8.64.

106 (60)

GOVERNMENT OF MYSORE

No. AFD 33 FDP 61

Mysore Government Secretariat,
Vidhana Soudha,
Bangalore-1,
Dated: 5th August 1964.

U.O. NOTE

Subject:- Lease of land for raising matchwood plantations - Request of M/s. W.I.M.Co.

-oOo-

Ref:- U.O.Note No. AFD 33 FDP 61 dated 1st August 1964.

The meeting on the above subject which was fixed for 4th August 1964 has been postponed to 11th August 1964 at 3 p.m.

The following officers are requested to make it convenient to attend the meeting in the chambers of the Minister for Forests & Fisheries on 11-8-1964 at 3 p.m. :-

1. The Secretary to Government, A&FD,
2. The Secretary to Government, C&ID,
3. The Secretary to Government, F.D.,
4. The Chief Conservator of Forests in Mysore, Bangalore.

T.S. Ramaiya
(T.S.RAMAIYA)
Under Secretary to Government,
Agriculture and Forest Department.

o/c

To

The Private Secretary to the Minister for Forests & Fisheries,
The Secretary to Government, Agri. & Forest Dept.,
The Secretary to Government, Commerce & Ind. Dept.,
The Secretary to Government, Finance Department,
The Chief Conservator of Forests in Mysore, Bangalore.

****

AN.
5/8

107 61

Appendix F. G. –1]

SUBJECT .....P – 60/CF.....

Diary No. of letter replied to..... .....

Mysore Government Secretariat.

( )

the 196 .

Date of issue.....23-9-64.....

Signed by.....

List of enclosures.....

Copied by .....

Examined by.....

Section

File No.

Serial No.

No. AFD 33 FDP 61

To

The C. C. F. 60/CF.

Ref. U.D. note No: AFD 33 FDP 61 dt. 5.8.64.

I am directed to enclose a copy of the proceedings of the meeting held in the chambers of Min (F&F) on 11.8.64 for further necessary action.

Y. F.

U. Secy.

Copy w. e. i. 1. above and together with a copy of the proceeding

P T

62

108

forwarded to :—

1. The P. S. to Min (F & F)
2. The P. A. to Secy. A & F.D.
3. The P. A to Secy C & I. D.
4. the ~~P. A to~~ Under Secy F. D (W & S).
5. The P. S. to C. M.

~~4.~~

Initt.
1. 9. 64.

109 63

Appendix F. G. – 1]

SUBJECT P-51/CF

Diary No. of letter replied to.....

Mysore Government Secretariat.

( )

the 196 .

ISSUED

Date 29-9-1964

Date of issue.....

Signed by.....

List of enclosures.....

Copied by .....

Examined by.....

Section

File No.

Serial No.

No. AFD 33 FDP 61.

To

M/S W. I. M. Co.
Nicol Road, Ballard Estate,
P. B. No: 254,
Bombay.

51/CF

Ref. your letter No: nil dated 3.2.64.

I am directed to state that Govt. after careful consideration of the case, have decided, as a general policy, not to lease out lands to Private Industrieis for raising plantations.

I am therefore to inform you that your request for

WD 012116—GPB—4,00,000—7-3-63

6.4.

lease of forest land in S.V.H.E.P. area

existing plantations, it is neglected, is not acceptable to Govt.

If however you require raw material you may give us an indication of the quantity you require of the different varieties indicating the period during which it has to be spread over and this will be considered and ~~a reply~~ action taken ~~sent to you~~ thereon or ~~we will be~~ ~~receiving your requirements~~ hearing from you

Y. F.

U. Sey.

19/9

Inst.
1/9/64.

22/CF.

Copy to the C.C.F., w.e.f. his letter No: A2(6)388/61-62 dt. 25.5.63 for information.

Inst.

111 65

GOVERNMENT OF MYSORE

No. AFD 33 FDP 61

MYSORE GOVERNMENT SECRETARIAT,
VIDHANA SOUDHA,

Dated, Bangalore, 29-9-1964.

FROM

The *Secretary to the Government of Mysore,*
Agriculture and Forest Department.

To

M/s Western India Match Co.,
Nicol Road, Ballard Estate,
P.B.No.254, BOMBAY.

Sir,

Sub: Lease of land for Matchwood Plantations — M/s W.I.M.Co.
Ref: Your letter No. Nil dated 3-7-1964.

I am directed to state that Government after careful consideration of the case have decided, as a general policy, not to lease out lands to Private Industries for raising plantations.

I am therefore to inform you that your request for lease of forest land in Sharavathy Valley Hydro Electric Project area for raising plantations, it is regretted is not acceptable to Government.

If however you require raw material you may give us an indication of the quantity you require of the different varieties indicating the period during which it has to be spread over and this will be considered and action taken thereon on hearing from you.

O/C

Yours faithfully,

Sd/-

(T.S. Ramaiya),
Under Secretary to Government,
Agriculture and Forest Department.

Copy to the Chief Conservator of Forests in Mysore, Bangalore, with reference to his letter No.A2(B)388/61-62 dated 25-5-1963 for information.

T.S. Ramaiya
(T.S. Ramaiya),
Under Secretary to Government,
Agriculture and Forest Department.

112 66

THE WESTERN INDIA MATCH CO., LTD.

BRANCHES AT:
CALCUTTA: MADRAS
BAREILLY

REGISTERED OFFICE:
INDIAN MERCANTILE CHAMBERS,
NICOL ROAD, BALLARD ESTATE,
P. O. BOX 254,
BOMBAY.

TELEPHONE : 262583 (8 LINES)
TELEGRAMS : "WESTMATCH"
CODE: BENTLEY'S

R 199

REGISTERED.

Your Ref.:
Our Ref.:

MYSORE GOVT. SECRETARIAT
NO. 4199/77
07 OCT 1964
AGRI. & FOREST DEPT. (RECEIPT & ISSUE)

No.AFD 33 FDP 61.
H:

October 1, 1964.

The Secretary to the Government of Mysore,
Agriculture and Forest Department,
Mysore Government Secretariat,
Vidhana Soudha,
BANGALORE.

F/A

Dear Sir,

65/CF

We beg to acknowledge receipt of your letter dated 29th September 1964.

MATCHWOOD PLANTATIONS:

1. We note with regret that Government of Mysore have decided as a general policy not to lease out lands to private industries for raising plantations.

2. For making matches, 45% of the wood is required for making the boxes and 55% for splints. When planning for the plantation of matchwood, may we suggest plantation of the following species, which would improve the quality of the matches produced in India and perhaps also some day enable our country to export matches and earn foreign exchange:

For Match Boxes:	Salmalia Malabarica Bombax Insigne Canarium Euphyllum.
For Match Splints:	Ailanthus Malabarica Evodia Roxburghiana Sterculia Campanulata Ailanthus Excelsa.

OUR MATCHWOOD REQUIREMENTS FROM MYSORE STATE:

3. We are grateful for what you have written in the last paragraph of your letter enquiring of us to indicate the quantity of raw material (matchwood) we require of the different species and the period during which we require.

4. The annual requirements of matchwood to-day are of the order of 144,000 tons of 50 c.ft. each. Allowing for an annual increase in population of 2.15% and rise in the standard of living (which the successive Five Year Plans aim at) and therefore an increase in the consumption of matches from 2.15 sticks (compared to 6.5 sticks in the United Kingdom) to 3.0 sticks per head per day, the annual requirements of matchwood by 1980 would be of the order of 242,000 tons of 50 c.ft. each.

5. On the matchwood supply front, the Match Industry is already in the beginning of a crisis. We are already faced with the beginnings of matches shortage in the country and this position is bound to steadily worsen until the matchwood plantations undertaken since the beginning of the 5-Year Plans mature. Government of India are worried among other things about the shortage of matches experienced in some parts of the country and have enquired of us if we cannot start a third shift in order to put more matches on the market and curb the present tendency of some links in the chain of distribution to demand a premium on the price at which manufacturers intend the match box to sell. And so far as the Match Industry generally is concerned, it is experiencing difficulty in getting matchwood sufficient to keep even the existing rate of production going.

6. The position in regard to items of goods, including matches, essential for our day-to-day life is so much engaging the attention of the Government of India that the Prime Minister in his letter of 7th August 1964 addressed to the Chief Ministers of States (and released to the Press) has emphasised the need for selling goods essential for our day-to-day life at fixed prices. For ready reference I attach hereto a copy of the concerned paragraph of that letter.

7. The present annual requirements of matchwood of our Ambarnath and Madras Factories, which now receive substantial supplies of matchwood from your State, are of the order of 36,000 tons (1.8 million c.ft.). With the increase in the demand for matches and Government's desire to produce more matches, we expect that the matchwood requirements of these two factories would go up to 54,000 tons (2.7 million c.ft.). We are deeply thankful to the Government

of Mysore for the Orders under which we are now extracting matchwood from your State for supply to our Ambarnath and Madras Factories. These Orders cover the period up to 31st December 1967 and we request that this period may please be extended up to 1980, by which time we hope the matchwood plantations undertaken during the first three 5-Year Plans would reach maturity and ease the matchwood supply position.

8. Matches being an article of every day use to all sections of the community, you will doubtless agree with us that the softwood requirements of the Match Industry should receive preference over the requirements of other softwood-based industries, such as plywood, packing cases, etc., who incidentally can use many other species of wood which the Match Industry cannot.

9. On page 3 of the Indian Standard Specification for Logs for Matches, No.IS:1140-1959 (copy attached) is given a list of species suitable for match manufacture and we are interested in such of those species as are to be found in the State of Mysore, as also any other softwood species which may prove suitable for match manufacture.

Yours faithfully,
THE WESTERN INDIA MATCH CO., LTD.,

(Akbar Hydari)
CHAIRMAN.

Encl.
TSK

Paragraph 15 of letter dated 7th August 1964 addressed by the Prime Minister to the Chief Ministers of the States.

15. While we are in the midst of food grain shortage, I have asked the different ministries concerned to consider the question of prices of some other items of goods which are also essential for our day to day life. Sometimes the prices of these articles lead to an increase in prices of foodgrains. Some of these items are cloth, vegetable oils, sugar, matches, kerosene, tea, soap and Vanaspati. It is important to fix the prices of these items and properly enforce them. These products are of interest to the common man and to the low income groups generally. Prompt action has already been taken in regard to the fixation of prices of popular varieties of cloth and it has been decided not to leave it to voluntary control. We should, as in other countries, generally adopt the practice of goods being sold at fixed prices. In fact there should be display of prices for all essential commodities and they should be sold only at those prices. It should become, more or less a matter of habit for the producer and the seller to know and understand that there will be no undue profiteering at any time. This may take time but we must move in that direction. Will it be possible for some of the shopkeepers at least to set an example? Let it be the duty of their Associations or other voluntary organisations to give a lead in this regard. I am sure that if they do it they will create tremendous goodwill for themselves and also truly serve the people.

116 (70

IS: 1140 - 1959

Indian Standard

SPECIFICATION FOR LOGS FOR MATCHES

UDC
674·038·3:662·53] (083·75) (540)

Timber Sectional Committee, BDC 9

Chairman	
SHRI G. G. TAKLE	Ministry of Food & Agriculture
Members	
SHRI C. A. R. BHADRAN	Inspectorate General of Forests (Ministry of Food & Agriculture)
SHRI K. D. BHATTACHARJEE	Government Test House, Calcutta
DIRECTOR	Central Building Research Institute (Council of Scientific & Industrial Research), Roorkee
SHRI S. R. IYENGAR	Naval Headquarters
DIRECTOR OF CIVIL ENGINEERING (*Alternate*)	
DR. A. N. KAPUR	Development Wing, Ministry of Commerce & Industry
MR. E. JOHN KURUVILA	Anamallais Timber Trust Ltd., Chalakudi
DR. D. NARAYANAMURTI	Forest Research Institute & Colleges, Dehra Dun
SHRI S. S. GHOSH (*Alternate*)	
DR. A. N. NAYER	Directorate of Technical Development (Ministry of Defence)
SHRI R. P. MATHUR (*Alternate*)	
DR. A. PURUSHOTHAM	Forest Research Institute & Colleges, Dehra Dun
SHRI S. RAMAMRITHAM	Directorate General of Civil Aviation (Ministry of Transport & Communications)
SHRI P. C. RAY	P. C. Ray & Co. (India) Ltd., Calcutta
SHRI K. P. SAGREIYA	Forest Department, Government of Madhya Pradesh
SHRI J. C. MEHTA (*Alternate*)	
SHRI A. C. SEKHAR	Forest Research Institute & Colleges, Dehra Dun
SHRI S. M. SIBTAIN	Forest Department, Government of Uttar Pradesh
BAWA SUNDER SINGH	Spedding, Dinga Singh & Co., New Delhi
SHRI P. N. TALWAR	Research, Design & Standardization Organization (Ministry of Railways)
SHRI K. RAMA VARMAN	National Buildings Organization (Ministry of Works, Housing & Supply)
DEPUTY DIRECTOR (MATERIAL) (*Alternate*)	
DR. LAL C. VERMAN (*Ex-officio*)	Director, Indian Standards Institution
Secretary	
SHRI C. S. CHANDRASEKHARA	Deputy Director (Bldg), Indian Standards Institution

Logs for Plywood and Matches Subcommittee, BDC 9:11

Convener	
SHRI C. A. R. BHADRAN	Inspectorate General of Forests (Ministry of Food & Agriculture)
Members	
SHRI R. M. DASS	Forest Department, Government of Assam
FOREST UTILIZATION OFFICER	Forest Department, Government of Mysore
ADDITIONAL TECHNICAL ASSISTANT TO THE CHIEF CONSERVATOR OF FORESTS (*Alternate*)	
SHRI S. GOTHBERG	Western India Match Co. Ltd., Bombay
SHRI N. C. JAIN	Plywood Manufacturers' Association of India, Calcutta
SHRI N. N. BOSE (*Alternate*)	
DR. A. N. KAPUR	Development Wing, Ministry of Commerce & Industry
SHRI K. S. LAULY	South Indian Plywood Manufacturers' Association, Feroke
OFFICER-IN-CHARGE, ANDAMAN TIMBER DEPOT	Forest Department, Government of Andaman
REPRESENTATIVE	Sivakasi Chamber of Match Industries, Sivakasi

© *Copyright* 1959 *by*

INDIAN STANDARDS INSTITUTION
MANAK BHAVAN, 9 MATHURA ROAD
NEW DELHI 1

***Price Rs* 1·50** *August* 1959

117

Indian Standard

SPECIFICATION FOR LOGS FOR MATCHES

0. FOREWORD

0.1 This Indian Standard was adopted by the Indian Standards Institution on 8 May 1959, after the draft finalized by the Timber Sectional Committee had been approved by the Building Division Council.

0.2 The supply of logs suitable for the manufacture of matches and match boxes is of great economic importance to the match industry. To manufacture a fair quality of match boxes and splints, the raw materials, the most important of which is timber, must conform to certain minimum requirements. *Salmalia malabarica* Schott & Endl. (**semul**) has been found suitable for both match boxes and match splints but due to inadequate supplies of this species, the match industry has had to use other available timbers to supplement the supply of *salmalia malabarica*. As the alternate species vary in their characteristics substantially, the Sectional Committee has felt it necessary to lay down the minimum requirements for quality of logs in order to provide the forest departments and the match industry a guide in the extraction of match logs and their purchase by the match factories.

0.3 This standard has been based upon the extensive experience of the match industry, the investigations carried out by the match industry and the Forest Research Institute, Dehra Dun, in regard to the use of suitable timber for matches and match boxes and the statistical data collected by the match industry and the forest departments during many years of match manufacture in the country.

0.4 This specification requires reference to the following Indian Standards:

IS: 401-1954 CODE OF PRACTICE FOR PRESERVATION OF TIMBER

IS: 707-1958 GLOSSARY OF TERMS APPLICABLE TO TIMBER, PLYWOOD AND JOINERY

0.4.1 Wherever a reference to any standard mentioned under **0.4** appears in this specification, it shall be taken as a reference to the latest version of the standard.

0.5 In pursuance of the decision of the Government of India to introduce a uniform system of weights and measures in the country based on the metric system, in this standard, metric dimensions have been used throughout and wherever necessary, equivalent fps units have been given in brackets. As the industry gets accustomed to the use of metric units, it is intended to drop the fps units altogether from the standard.

0.6 For the purpose of deciding whether a particular requirement of this standard is complied with, the final value, observed or calculated, expressing the result of a test or analysis, shall be rounded off in accordance with IS : 2-1949 Rules for Rounding Off Numerical Values. The number of significant places retained in the rounded off value, should be the same as that of the specified value in this standard.

0.7 This standard is intended chiefly to cover the technical provisions relating to logs for matches, and it does not include all the necessary provisions of a contract.

---

1. SCOPE

1.1 This standard covers the minimum requirements for logs of different species for use in the manufacture of match boxes and splints.

2. TERMINOLOGY

2.1 For the purpose of this standard, the following definitions shall apply and for definitions other than those given below, reference may be made to IS : 707-1958:

Crotch — A fork in a log of wood.

Cylindrical — A log is cylindrical when the difference between the big and the small diameters under-bark at either end of the log is less than 7·5 cm (or 3 in.).

Drag-Hole — Hole made at the end of a log to facilitate dragging of the log.

Flute — A longitudinal depression on the surface of a log.

Oval Log — A log is oval when the difference between the small and big diameters at either end of the log is 7·5 cm (or 3 in.) or more.

Slot — A slot made around one end of a log to prevent the drag chain or rope from slipping when the log is dragged.

Snout — Pointed end of a log when felling and logging is done by axe.

Splints — Undipped match sticks, prior to application of chemical head.

Veneer — A thin layer of wood of uniform thickness, obtained by slicing, rotary cutting or sawing.

ERRATUM

IS:1140-1959 SPECIFICATION FOR LOGS FOR MATCHES

Page 3, Table I, against 'Sl No. VI (*Bombax insigne*)', in the column under 'Boxes'

please read '×' *in place of* '—'

TABLE I SPECIES OF TIMBER SUITABLE FOR MATCH MANUFACTURE

(*Clause* 3.1)

Sl No.	Botanical Name	Trade Name	Use	
			Splints	Boxes
I	*Ailanthus excelsa* Roxb.	maharukh	×	—
II	*Ailanthus grandis*	borpat	×	—
III	*Ailanthus malabarica* DC	mattipal	×	—
IV	*Alstonia scholaris* R. Br.	chaitan	×	—
V	*Anthocephalus Cadamba* Miq.	kadam	×	—
VI	*Bombax insigne*	didu	×	—
VII	*Canarium euphyllum* Kurz.	white dhup	—	×
VIII	*Canarium strictum* Roxb.	ral dhup	—	×
IX	*Cryptocarya amygdalina*	kalasum	×	×
X	*Dysoxylum malabaricum* Bedd.	white cedar	×	×
XI	*Eloeocarpus tuberculatus* Roxb.	rudrak	×	—
XII	*Endospermum malaccense*	bakota	×	×
XIII	*Evodia roxburghiana* Benth.	kambli	×	—
XIV	*Gyrocarpus americanus* Jacq.	tanaku	×	—
XV	*Hymenodictyon excelsum* Wall.	kuthan	×	—
XVI	*Lophopetalum wightianum* Arn.	banati	×	×
XVII	*Machilus macrantha* Nees.	machilus	—	×
XVIII	*Mangifera indica* Linn.	mango	—	×
XIX	*Salmalia malabaria* Schott & Endl.	semul	×	×
XX	*Sideroxylon longepetiolatum* King et. Prain.	lambapatti	×	×
XXI	*Spondias magnifera* Willd.	amra	×	×
XXII	*Sterculia campanulata* Wall.	papita	×	—
XXIII	*Sterculia vellosa* Roxb.	udal	×	—
XXIV	*Symplocos spicata*	podipari	×	—
XXV	*Trewia nudiflora* Linn	gutel	×	—

Note — × means suitable
— means unsuitable

3. SPECIES OF TIMBER

3.1 Unless specified otherwise, logs for the manufacture of match boxes and splints shall be from any of the species given in Table I. Other species found suitable may also be supplied subject to prior agreement between the purchaser and the supplier.

4. DIMENSIONS AND MEASUREMENT

4.1 Length

4.1.1 *Gross Length* — The gross length shall be not less than 2 metres (or 6·5 ft). A minimum gross length of 3 metres (or 10 ft) is, however, recommended. The maximum, if required, shall be specified by the purchaser. It shall be permissible to supply 5 percent of the logs having gross lengths of 1·4 m (or 4·5 ft).

4.2 Girth

4.2.1 *Mid-Girth Over-Bark*—The mid-girth over-bark shall be not less than 90 cm (or 3·0 ft) and not more than 300 cm (or 10·0 ft).

4.2.1.1 For *Evodia roxburghiana* Benth., a minimum mid-girth of 60 cm (or 2·0 ft) over-bark shall be permissible.

4.2.1.2 For *Mangifera indica* Linn. and *Spondias magnifera* Willd., the mid-girth over-bark shall be not more than 167 cm (or 5·5 ft).

4.3 Measurement — The length and the girth of the log shall be measured as specified under **4.3.1** and **4.3.2**. In measuring the length, fractions of a metre shall be rounded off to the nearest lower 5 cm. In measuring the girth, fractions of a centimetre shall be ignored.

4.3.1 *Length*

4.3.1.1 When the ends are snouted, the length of the logs shall be measured from the first felling cut, that is the cut extending farthest into the length from the butt end, to the nearest cut at the top end (*see* Fig. 1A).

4.3.1.2 When cross-cut by a saw and the end surfaces are parallel to each other, the length of the log shall be measured from one end to the other end (*see* Fig. 1B) and, when the end surfaces are not parallel to each other, the length shall be measured

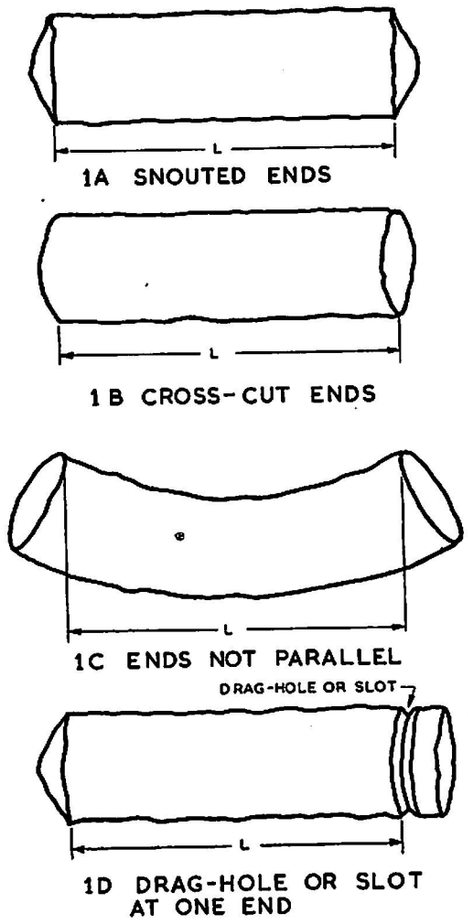

FIG. 1 MEASUREMENT OF LENGTH OF LOGS

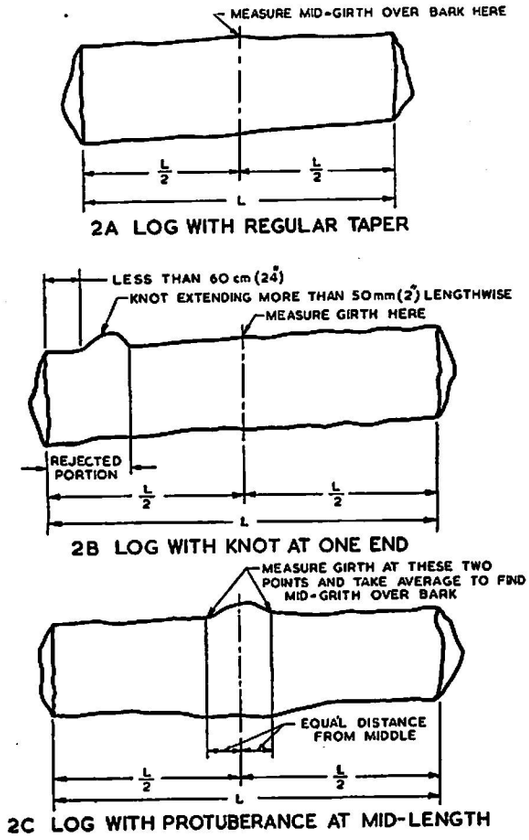

FIG. 2 MEASUREMENT OF GIRTH

by the shortest distance between the two ends (*see* Fig. 1C).

4.3.1.3 Where there is a drag-hole or a slot on one end, the length of the log shall be measured between the other end and the slot (*see* Fig. 1D).

4.3.2 *Girth*

4.3.2.1 The girth, in the case of logs of regular taper and without any protuberance at mid-length shall be measured at the mid-length of the log (*see* Fig. 2A and 2B).

4.3.2.2 In the case of a log with irregular taper, three girth measurements shall be taken, that is one at the mid-length and one at each end, the mean girth being obtained by taking the average of these three measurements.

4.3.2.3 In the case of a log with regular taper but with protuberance at mid-length, the girth shall be measured at each side of the protuberance as near to it as possible but at equal distance from the middle of the log and the average taken (*see* Fig. 2C).

4.3.3 *Volume* — The volume of a log shall be calculated as:

$$V = \left(\frac{G}{4}\right)^2 \times L$$

where

V = volume,
G = girth, and
L = length.

4.4 Unless otherwise agreed to between the purchaser and the supplier, 10 percent reduction on over-bark measurements shall be made as bark allowance.

5. REQUIREMENTS

5.1 Logs shall be supplied to the factories fresh after felling, and the time allowed between their felling and supply to the factories should not normally exceed two months. In order to keep the logs fresh, the bark on the logs shall as far as possible be left intact.

5.2 The logs shall be sound, cylindrical, of straight growth, reasonably fresh-cut and with the bark intact. The logs shall be free from knobs, twisted or spiral growth, knots, cracks, rings, bulges,

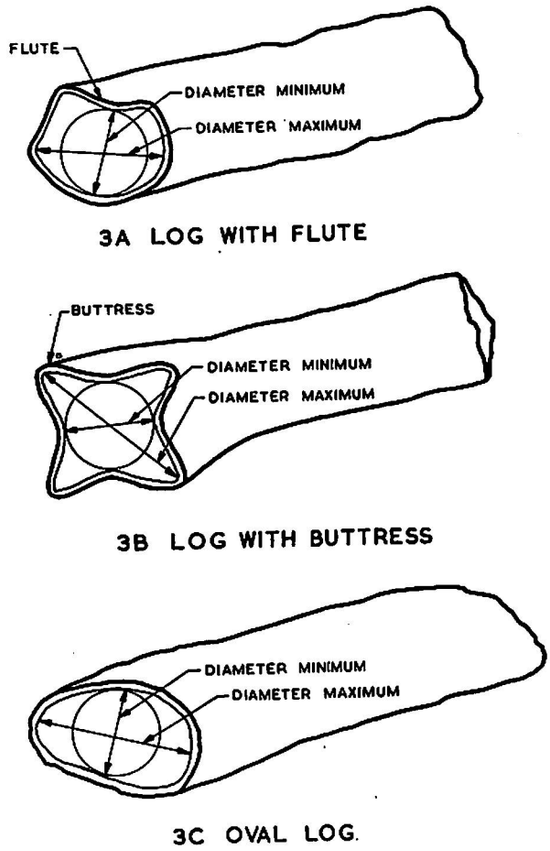

FIG. 3 MEASUREMENT OF FLUTE, BUTTRESS AND OVAL LOGS

buttresses, hollow, dry or decayed portions, overmaturity, crotches, brashwood and any kind of decay (rot) including dote, insect attack or other defects excepting those permitted under **6**. The plugging of defects shall not be permissible.

6. *DEFECTS

6.1 Logs shall be inspected for defects and rejections or full deductions for defects in gross length and mid-girth over-bark shall be made in the manner specified under **6.2** to **6.20**. A deduction in length shall be made for the clear portion between any two defects or any defect and the end of the log if such portion is less than 45 cm (or 18 in.) in length.

6.2 Bark Pockets, Bird Pecks and Wounds not exceeding 12 mm (or ½ in.) in diameter and 25 mm (or 1 in.) in depth shall be permissible up to two in number per 3 m (or 10 ft) length of log.

6.3 Borer Hole — The logs shall be free from marine borers and powder post borers. Occasional borer holes not exceeding 6 mm (or ¼ in.) in diameter shall be permissible. However, logs over 1·5 m (5 ft) in girth may be accepted provided the borer holes do not extend beyond 25 mm (or 1 in.) in depth.

6.4 Dote, Rot (Including Blue Rot) Sun Cracks and Driage shall be permissible if these do not penetrate more than 12 mm (or ½ in.) into the log. In case penetration is more than 12 mm (or ½ in.), a deduction in girth equal to six times the maximum penetration of these defects in any part of the log shall be made.

6.5 Bulge, Knob, Knot — A bulge, knob or live knot extending up to 50 mm (or 2 in.) and dead knot extending up to 25 mm (or 1 in.) lengthwise on a log and occurring not more than three in number in a length of 3 m (or 10 ft) shall be permissible. If extending more than 50 mm (or 2 in.) in case of a bulge, knob or live knot, and 25 mm (or 1 in.) in case of a dead knot, or occurring more than three in number in a length of

*Illustrations of defects are exaggerated to bring out the defects clearly.

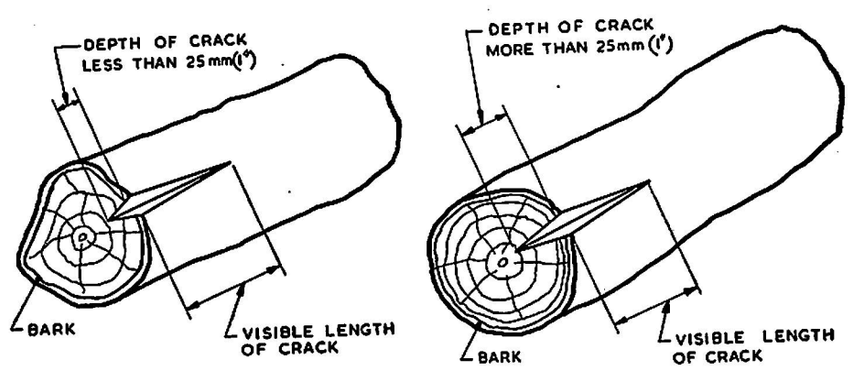

4A Crack Less Than 25 mm (1") in Depth

4B Crack More Than 25 mm (1") in Depth

FIG. 4 MEASUREMENT OF CRACKS

3 m (or 10 ft), it shall constitute a defect to its full extent lengthwise on the log, and corresponding deduction shall be made in the length.

6.6 Burnt Part — If any part of a log has been burnt, the length of the burnt portion and 75 mm (or 3 in.) on each side of the same shall be deducted from the length of the log.

6.7 Buttress, Flute or Oval Logs — The girth of logs affected by these defects shall be calculated by taking the average diameter of the inscribed circle at the small and big ends of a log and then multiplying the average by 3 (*see* Fig. 3).

6.8 Crack (Split)— A crack penetrating not more than 25 mm (or 1 in.) from the surface (excluding the thickness of the bark) shall be permissible. Cracks penetrating more than 25 mm (or 1 in.) from the surface shall constitute a major defect and a deduction in length shall be made to the extent of the visible length of the cracks plus 15 cm (or 6 in.) (*see* Fig. 4).

6.9 Crotch — Full deduction of the length of the crotch shall be made from the length of the log.

6.10 Curvature — If the log has got a sharp bend, the straight portion of the log on each side of the bend shall be treated as a separate log and each such log shall conform to the requirement of this standard (*see* Fig. 5A). A deviation in straightness up to 10 cm (or 4 in.) in a length of 3 m (or 10 ft) shall be permissible (*see* Fig. 5B). If there is more than one curvature, the log shall be rejected (*see* Fig. 5C).

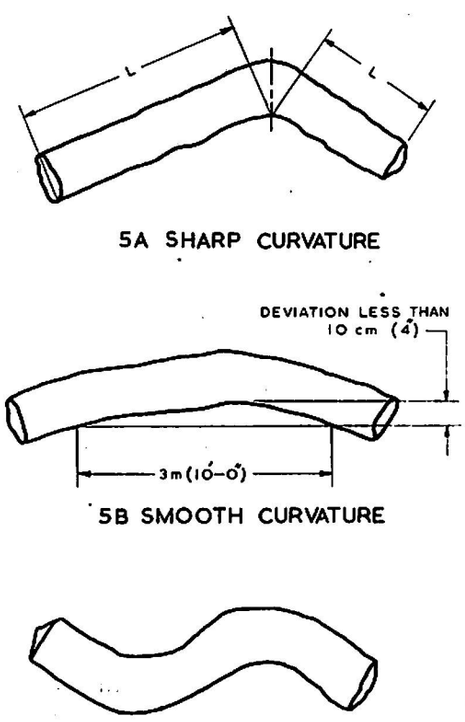

FIG. 5 MEASUREMENT OF CURVATURE

6.11 Drag-Hole, Slot and Snout — These shall be excluded when measuring the length of the log (*see* Fig. 1D).

6.12 Eccentric Heart — Where the distance from the surface (or, in oval logs, from the inscribed circle), anywhere on a log to the heart of the log, is less than one-third the diameter, the log shall be rejected entirely if such log is so affected throughout (*see* Fig. 6). If only a part of the log is so affected, the affected portion shall be cut off or deducted from the length of the log.

6.13 Hollow Centre — Hollow centres exceeding 50 mm (or 2 in.) in diameter shall constitute a defect to the extent of the measurable length of the hollow plus 30 cm (or 1 ft), to be deducted from the gross length of the log. Logs with plugged centres shall be entirely rejected.

6.14 Interlocked or Twisted Grain — Logs with interlocked or twisted grain shall be entirely rejected.

6.15 Over-Maturity — Logs affected with hard discoloured centres not more than 15 cm (or 6 in.) in diameter in the centre may be accepted, provided the log is free from other defects and has a mid-girth over-bark of 180 cm (or 6 ft).

6.16 Shakes

6.16.1 *Cup Shake (Ring)*— Cup shake visible on one or both ends and located within 50 mm (or 2 in.) from the centre heart (pith) of the log shall be permissible.

6.16.1.1 If there is only one ring within 50 mm (or 2 in.) from the surface of a log, the log shall be accepted, subject to the girth being computed by taking the smallest diameter of the ring and multiplying the same by 3. If there are two or more rings at different distances from the centre of a log, the entire log shall be rejected.

6.16.2 *Heart Shake, Radial Shake, Star Shake* visible on one or both ends and located within 50 mm (or 2 in.) from the centre heart (pith) of the log shall be permissible.

6.16.3 *Spongy Heart, Soft Heart, Punky Heart* — Logs affected with such defects shall be rejected entirely if the spongy, soft or punky heart exceeds 50 mm (or 2 in.) in diameter.

6.17 Spongy (Too Soft) Wood — Logs with spongy (too soft) wood shall be rejected entirely.

6.18 Taper — A taper up to one cm per 10 cm in diameter in every 2·5 m (or 8 ft) length of log shall be permissible.

6.19 Under-Girth or Short Length Log — Logs below the stipulated minimum mid-girth and length shall be rejected entirely.

193

ERRATUM NO. 2

IS:1140-1959 SPECIFICATION FOR LOGS FOR MATCHES

Page 7, clause **8.1**, line 3

please read 'prophylactic' *for* 'preservative'

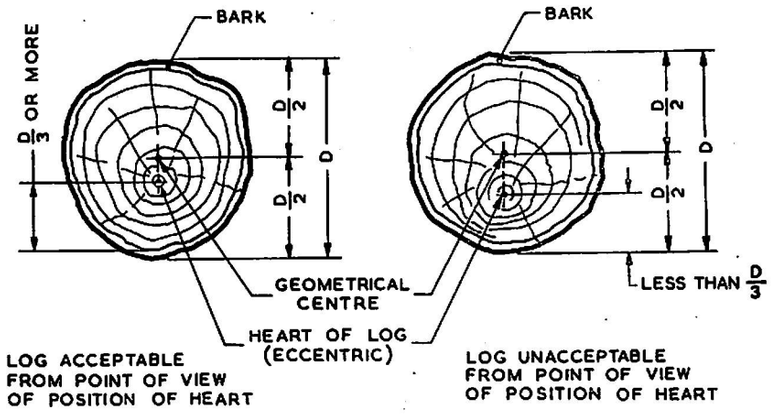

6A ECCENTRIC HEART OF CYLINDRICAL LOG

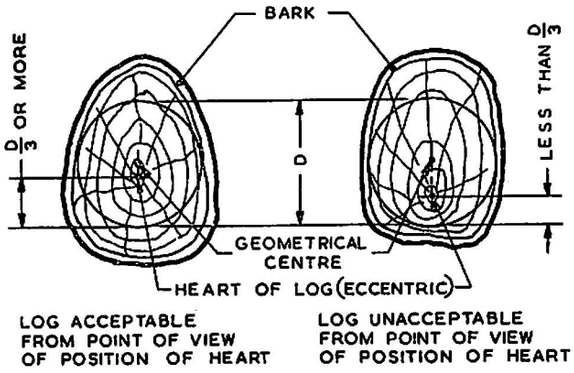

6B ECCENTRIC HEART OF NON-CYLINDRICAL LOG

FIG. 6 ECCENTRIC HEART

6.20 Not withstanding the permissible defects referred under **6.2** to **6.19**, the total number of defects permitted under **6.2** to **6.19** shall not collectively exceed four per 3 m (or 10 ft) length of the log.

7. PLACE OF MEASUREMENT

7.1 Measurement and inspection shall be done in the presence of the representatives of the purchaser and the supplier at the place mutually agreed upon, and where this is not possible, the procedure for measuring and inspection shall be stipulated in the contract.

8. PRELIMINARY TREATMENT

8.1 Immediately after felling of the trees, the ends of logs and portions uncovered with bark shall be given a preservative treatment as specified for group 6 in Table I of IS : 401-1954.

PUBLICATIONS OF INDIAN STANDARDS INSTITUTION

INDIAN STANDARDS

Over 1 200 Indian Standards, broadly classified under the following heads, have been issued so far:

Engineering

Bicycle Components
Cutlery
General Engineering
Machinery
Miscellaneous Items
Sports Goods
Tools

Building

Bitumen, Tar and Tar Products
Builder's Hardware
Building Design
Cement and Concrete
Floor and Roof Coverings
General Civil Engineering
Lime and Gypsum
Miscellaneous Items
Refrigeration and Air-Conditioning
Services Equipment and Accessories
Timber and Wood Products

Textile

Cotton
Jute
Miscellaneous Items
Silk
Textile Mill Stores and Accessories
Textile Test Methods
Wool

Chemical

Coal and Coke
Essential Oils
General Chemicals
Glass and Ceramic Wares
Inks, Paper and Other Allied Products
Leather and Leather Goods
Metal Containers
Oils, Fats and Soaps
Paints, Printing Inks, Lac and Allied Materials
Petroleum Products and Lubricants
Rubber — Plastics and Allied Products

Agricultural & Food

Cereal Products
Confectionery
Dairy Products
Food Grain Storage
Pest Control Products
Starches
Sugars

Structural & Metals

Chemical Analysis
Non-Ferrous Metals
Ores
Physical Tests
Pig Iron, Cast Iron and Malleable Cast Iron
Refractories
Solders
Steel and Steel Products
Welding
Design and Construction

Electrotechnical

Electrical Line Materials
Electrical Rotating Machinery
Electronics and Radio Equipment
Heavy Electrical Equipment
Light Electrical Equipment

Miscellaneous

Conversion Tables and Guide for Conversion to Metric System
Documentation
Metric Weights and Measures
Quality Control and Industrial Statistics

OTHER PUBLICATIONS

	Rs
ISI Bulletin (Published Every Two Months)	
Single Copy	2·00
Annual Subscription	6·00
Annual Reports (from 1948-49 Onwards)	2·00 each
Report of the ISI Special Committee on Weights and Measures	2·00

ISI Handbook 1957 with 1958 Addendum (Rs 3·00 per copy), gives brief reviews and other particulars of Indian Standards

Available from :

INDIAN STANDARDS INSTITUTION

Headquarters

Manak Bhavan, 9 Mathura Road, New Delhi 1

Phones : 45915-9 43063-4 Grams : 'Manaksanstha' New Delhi

Bombay Branch Office
General Assurance Building
230 Dr. Dadabhoy Naoroji Road
Fort, Bombay 1
Phone: 252782
Grams: 'Manaksanstha' Bombay

Calcutta Branch Office
P-11 Mission Row Extension
Calcutta 1
Phone: 23-1823
Grams: 'Manaksanstha' Calcutta

Madras Branch Office
2/21 First Line Beach
Madras 1
Phone: 3836
Grams: 'Manaksanstha' Madras

PRINTED AT THE CATHOLIC PRESS, RANCHI, INDIA

106 / 71

Appendix F. G. –I]

SUBJECT P-65/CF

Diary No. of letter replied to.....

Mysore Government Secretariat.

( )

the 196 .

ISSUED

Date of issue Date 5-11- 196 4

Signed by.....

List of enclosures.....

Copied by .....

Examined by.....

Section

File No.

Serial No.

No. AFD 33 FDP 61.

To

The C.C.F.

Reference: 202/CF.

1. your letter No: A2(B) 386/61-62 dt. 25.5-63.

2. 65/CF. b.x. of even No: dt. 29.9.64.

I am directed to enclose a copy of letter dated 1.X.64 from M/S W.I.M. Co. for remarks.

* PP 66-68/CF.

Y.F.

U. Sary

23.X.64.

197 73

MYSORE GOVT. SECRETARIAT
AGRL & FOREST DEPT (Accts)
3154/FA
24 JUL 1964

Fm II 1751/64

13- 7- 196

The Executive Director,
The Western India Match Co. Ltd.,
Indian Mercantile Chambers,
Nicol Road, Ballard Estate,
P.O. Box No.254, Bombay-1.

Sir,

Please refer to your letter dated 3-7-1964 addressed to Chief Minister regarding leasing of land for Match-wood Plantations.

Chief Minister would like to meet the representatives of WIMCO on 20th July 1964 at 10.00 am in his chambers at Vidhana Soudha, Bangalore.

Yours faithfully,

Private Secretary

OT.

128-72

INVEST WISELY BUY NATIONAL SAVINGS CERTIFICATE

INDIAN POSTS AND TELEGRAPHS DEPARTMENT

Recd on 11-6-64

MTC 16/No. 1677 850 G

Class Prefix } ..... Code... 3755/PA

MYSORE GOVT. SECRETARIAT No. 24 JUL 1964 AGRL. & FOREST DEPT (Hdq.)

Recd. from ..... Sent at ..... H. ..... M.

To .....

By ..... By .....

Office-stamp

Handed in at (Office of Origin | Date | Hour | Minute | Service Instructions | Words

Sri A ...

Recd. here at ..... H. ..... M.

TO

0 1730 AA 464 BOMBAY 15 42 SRI S VARADAN PRIVATE

SECRETARY TO CHIEF MINISTERS GOVERNMENT OF MYSORE VIDHANA

SOUDHA BANGALORE =

MNY THANKS YOUR LETTER CM II 1751/64 THIRTEENTH JULY WE

DEPUTING OUR WOOD MANAGER HARIHARAIYER CALL ON HONOURABLE

CHIEF MINISTER TWENTIETH AS ADVISED Co = 1751/64 E

Bharathi Press, Vellor = WESTERN INDIA MATCH COMPANY =

Secy (AF)

Draft 129 74

The Executive Director,
The Western India Match Co Ltd.,
Indian Mercantile Chambers
Nicol Road, Ballard Estate,
PO Box No.254, Bombay-1.

Sir,

Please refer to your letter dated 3-7-1964 addressed to C.M. regarding leasing of land for Match-wood Plantations.

C.M. would like to meet the representatives of WIMCO on 20th July 1964 at 10.00 a.m. in his chambers at Vidhana Soudha, Bangalore.

Yours faithfully,

13

P.S. to C.M.

OT.

D r a f t

The Executive Director,
The Western India Match Co. Ltd.,
Indian Mercantile Chambers
Nicol Road, Ballard Estate,
P.O.Box No.254, Bombay-1.

Sir,

Please refer to your letter dated 3-7-1964 dated to C.M. of Mysore regarding lease of Land for Matchwood Plantations.

I am desired to inform you that a meeting has been convened in C.M's chambers at V.S., Bangalore on 20th July 1964 at 10.00 a.m. in this connection. It is requested that the Representatives of M/s Wimco may please make it convenient to be present at the meeting.

Yours faithfully,

P.S. to C.M.

OT.

131
75

No.

OFFICE OF THE CHIEF MINISTER

NOTE

Dated 13-7-1964

Cm II 175d. 57/64

A meeting will be held on 20th July 1964 at 10.00 a.m. in the Chambers of Chief Minister, Vidhana Soudha to discuss the subject regarding leasing of Land for Match-wood Plantations to the Western India Match Co. Ltd.(WIMCO). Chief Minister desires that the following may please make it convenient to be present.

1. Minister for Forests,
2. Minister for C & I
3. Secretary to Govt., A & F Dept.
4. Secretary to Govt., C & I Dept.
5. Chief Conservator of Forests, Bangalore.

S. Varadan
(S.Varadan)
Private Secretary to the
Chief Minister.

P.S. to Min. for Forests.
P.S. to Minister for C & I
Secretary to Govt., A & F Dept.
Secretary to Govt., C & I Dept.
Chief Conservator of Forests in Mysore,
Bangalore.

OT.

132

76

Draft

A meeting will be held on ~~16th~~ 20th July 1964 at 10 am in the chambers of C.M., V.S. to discuss the subject regarding leasing of Land for Matchwood Plantations to the Western India Match Co. Ltd. (WIMCO). C.M. desires that the following may pl make it convenient to be present.

1. Min. forests.
2. Min. C & I
3. Secy. A & F Dept.
4. Secy. C & I Dept.
5. C.C.F.

12/7

P.S. to C.M.

xxxxx

OT. Invite WIMCO reps

133/77

THE WESTERN INDIA MATCH CO., LTD.

BRANCHES AT:
CALCUTTA: MADRAS
BAREILLY

REGISTERED OFFICE:
INDIAN MERCANTILE CHAMBERS,
NICOL ROAD, BALLARD ESTATE,
P. O. BOX 254,
BOMBAY.

TELEPHONE : 262583 (8 LINES)
TELEGRAMS : "WESTMATCH"
CODE: BENTLEY'S

Your Ref:
Our Ref:

OFFICE OF THE CHIEF MINISTER, BANGALORE. No. 7 JUL 1964

July 3, 1964.

Sri S. Nijalingappa, B.A., LL.B.,
Hon'ble Chief Minister,
Government of Mysore,
Vidhana Soudha,
BANGALORE.

Let us meet the representative. Mr. Joseph with C.C.F. may kindly attend.
7/64

Dear Sir,

Lease of Land for Matchwood Plantations.

We are interested in undertaking matchwood plantations in the Sharavati River Valley Submersion Area and our proposal was, in the first instance, contained in our letter dated 21st February 1963 addressed to the Conservator of Forests, Shimoga Circle, as per copy enclosed. The matter has since been discussed between us and your Government. We have yesterday had the pleasure of discussing this subject with your Hon'ble Minister for Forests, who was passing through Bombay.

At present, the matchwood requirements of the Match Industry of India are of the order of 120,000 tons of 50 c.ft. each and by 1983 this figure is expected to go up to 200,000 tons. The matchwood resources of India are fast dwindling and the Industry has great difficulties in getting adequate quantities of matchwood, and already in several parts of the country, the beginnings of a shortage of this essential commodity — matches — are noticeable. In the critical situation that is now developing, we feel that the Industry also should put its shoulders to the wheel of reafforestation in an endeavour to supplement Government's efforts in this direction. Our Associates abroad have extensive experience of matchwood plantations

10 am 16/7. I write Secy (AFF) & Secy (CST) also in addition. Informed the Exe. Dir of WIMCO who has written this. Have seen the papers. To Secy (AFF)
16/7

134 78

in different parts of the world and we can freely draw on their vast experience if we are given an opportunity of having our own plantations in your State.

We understand that it takes about 30 years for matchwood trees to reach maturity and we feel that, to be economical, it would be necessary to have a lease covering three periods of plantation. We gather that giving out land on long-term lease for plantation purposes involves a question of Government policy and we therefore take the liberty of approaching you in the matter. Our representatives would only be too pleased to call on you whenever you so desire.

Yours faithfully,
THE WESTERN INDIA MATCH CO., LTD.,

EXECUTIVE DIRECTOR.

Encl.
H.TSK.

135 79

(TRUE COPY)

February 21, 1963.

Y. M. L. Sharma, Esq.,
Conservator of Forests,
Shimoga Circle,
SHIMOGA.
(Mysore State).

Dear Sir,

Re: Lease of Land for Matchwood Plantations.

As you are aware, we have for long been interested in raising matchwood plantations to supplement Government's efforts in this direction, having regard to the very serious matchwood supply position that is developing and we have approached the Government of Mysore in the matter.

Mr.Stig Wijkstrom, Vice Managing Director of The Swedish Match Company, Jonkoping (Sweden), who has long experience of matchwood plantation in various parts of the world is now, as you know, in India. We are grateful to you for sparing the time and taking the trouble to show him and our Wood Manager, Mr.T.A.Harihara Iyer, round your forests of the Sharavati River Valley Submersion Area and the forests in the Sringeri/Gangamulla area, being possible sites for matchwood plantations as indicated by you.

We are pleased to confirm that we are interested in purusing the idea of matchwood plantations in the areas mentioned below and for your information would also state some of the points which, we believe, should be considered in this connection:

1) Sharavati River Valley Submersion Area: The plantation area should include

(a) all Islands and Peninsulas, expected to cover some 10,000 to 15,000 acres

(b) all other land within the area bounded by the Dam and the roads surrounding the Submersion Area, expected to cover some 5,000 acres.

2) Sringeri/Gangamulla area: The grasslands on the upper slopes of the hills are not suitable for matchwood plantation and therefore the lands which we would be interested in for matchwood plantations would necessarily have to be restricted to such portions along the valleys and lower slopes which contain a fair portion of good soil and would be suitable for matchwood plantation.

We feel that the lease should be for a period of 99 years with the right to cut and utilize the trees planted at any time. The amount of lease rent to be paid may be revised every 30 years, which is expected to be the average period of rotation for matchwood, any increase of the lease rent, however, not to exceed 50% of the original lease rent.

For the 20,000 acres mentioned above an annual lease rent for the first period of Rs.50,000/- would be a fair amount considering that it is expected to be possible to convert only some 25-50% of the gross acreage into effective matchwood plantations.

It will be appreciated that before the actual field plantings could begin, various preliminary work in the form of surveys, nurseries, living quarters for workmen and staff, experimental plantations, etc., will be necessary. It is therefore suggested that payment of the annual lease rent should be based on the area brought under plantation or our occupation. There should be no other charges or Royalties of any kind to be paid.

The lease should provide:

(a) use of the area for the plantation of matchwood as well as any other tree species as we deem suitable.

(b) use of any part of the land for the erection of any industry without any extra charges.

(c) unrestricted use of the Dam water free of charge for the irrigation of the plantations as well as of any industry which may be established (in connection with these plantations).

(d) the right of way for bringing any product or material to and from the leased area across Government forests land, either reserved forests or other forests or lands under the control of the Revenue Department.

137 81

(e) for the lease period of 99 years the land under lease should not be brought within the purview of any legal enactment restricting the area that may be owned by an individual or a Company.

(f) in the event of the Company closing its factories, the Company should have the right to terminate the lease by 12 months' notice, which may be given at any time.

We are now with great interest looking forward to hear from you.

Yours faithfully,
THE WESTERN INDIA MATCH CO., LTD.,

Sd/-

SWm:H:TSK.

EXECUTIVE DIRECTOR.

Copied:TSK.
3-7-1964.

138 182

U.O.No.CI 3883/G/64.

Commerce & Industries Deptt.,
Vidhana Soudha,
Bangalore, Dated 18-1-1965.

MYSORE GOVT. SECRETARIAT (ISSUE) AGRL. & FOREST DEPT (RECEIPT & ISSUE) No. 3491 20 JAN 1965

U. O. NOTE.

Sub: Lease of land for raising Matchwood plantations - Request for M/s. WIMCo.

Ref:- Your letter No.AFD 33 FDP 61 dated 23-9-64.

The Agriculture and Forest Department is requested kindly to forward a complete copy of the proceedings of the meeting held in the chambers of the Minister for Forest and Fisheries on 11-8-64 as the same has not been received in this Department in complete set.

(S.V.PRABHU)
Under Secretary to Government,
Commerce and Industries Deptt.

THE AGRICULTURE & FOREST DEPTT.

20/1/65

139 (83

U.O. No: AFD 33FDP 61

M. G. S. App. F. G. 3].

MYSORE GOVERNMENT

SECRETARIAT.

(*Continuation sheet draft form*).

Subject:— P-82/CF.

Ref. U.O. No: CF 3883/82/CF. 6/64 dt. 18.1.65.

A copy of the proceedings of the meeting held in the chambers of Min (F&F) on 11.6.64, is enclosed.

U. Secy.

C&I Dept.

21.1.65.

WD 012117—GPB—1,00,000—7-3 63

140

GOVERNMENT OF MYSORE

U.O.NOTE NO.AFD 33 FDP 61 Agri. & Forest Department, Bangalore, Dated 28 Nov 65

Ref: U.O.Note No.CI 3883/G/64 dated 18-1-1965.

A copy of the proceedings of the meeting held in the chambers of Minister for Forests and Fisheries on 11-8-1964 is enclosed.

O/c.

(T.S. Ramaiya),
Under Secretary to Government,
Agriculture and Forest Department.

C & I Department)